LARGE POSITIONING SYSTEM SPECIFICATION

KS-LPS1000

Features

- Die-casting aluminum housing and rugged mechanism with sun shroud, switch control, wiper, heater, defroster and fan.
- High resolution SONY, HITACHI cameras available
- English OSD menu for easy setting up and operation
- Built-in multi protocols with RS485 control
- 255 presets with ±0.05° accuracy
- 4 tours with dwell time selectable
- 4 auto scanning with different scanning mode
- 4 patterns with 300s recording each pattern
- Support video freeze, WDR, BLC etc
- 4 alarm in and 2 relay out
- Support 4～24 privacy blanking
- 360° continuously pan, -85 °～+35 ° tilt
- Up to 80°/s for pan & 40°/s for tilt preset speed
- Support IR/Laser for night vision surveillance in poor light conditions (optional)
- Support water jet with washer-wiper linkage (optional)
- Working temperature: -40°C~ +55°C
- IP66 weather proof & lightening and surge protection for outdoor
- Best choice for inclement environment such as sea port, airport etc

Specification

Power supply	110/230/24VAC selectable	**Communication**	RS485,
Power consumption	50W, 70W(with IR)	**ID range**	1-254
Low temperature protection	-15° heater activated	**Baud rate**	1200 / 2400 / 4800 / 9600 bps
Fan	activated	**Support protocols**	Pelco-P, Pleco-D
Synchronization	Internal	**Operating temp.**	-40°～+55°
Pan	360° continuously	**Operating humidity**	0-95% no condensing
Tilt	-85°～+35° with auto image reverse	**Protection level**	IP66, TV4000 lightening & surge protection
Preset speed	Pan: 80°/s; Tilt: 40°/s	**Video output**	Female BNC
Manual speed	Pan: 0.1°～80°/s; Tilt: 0.1°～40°/s	**Weight**	14kg, 16kg(with IR)

IR Parameters

Distance	> 100m	**Voltage**	12V DC
View angle	45°	**Current**	1A x 2
IR lens	(Φ8×6pcs) x 2	**Power consumption**	12W x 2
IR efficiency	90%	**Dimension**	(Φ108×85mm) x 2
Wave length	850nm	**Weight**	0.5kg x 2

Laser Parameters

	150m	200m	300m
View distance	140-170m	180-220m	280-320m
Wave length	808-810nm		
Light angle	8°		
Power consumption	< 16W	< 30W	< 40W
Voltage	12V DC		
Dimension	209*136*106mm	215*92*112mm	209*136*106mm
Weight	0.5kg x 2		
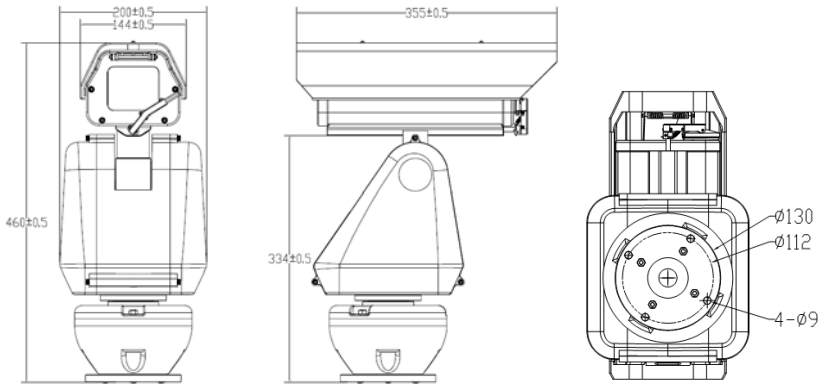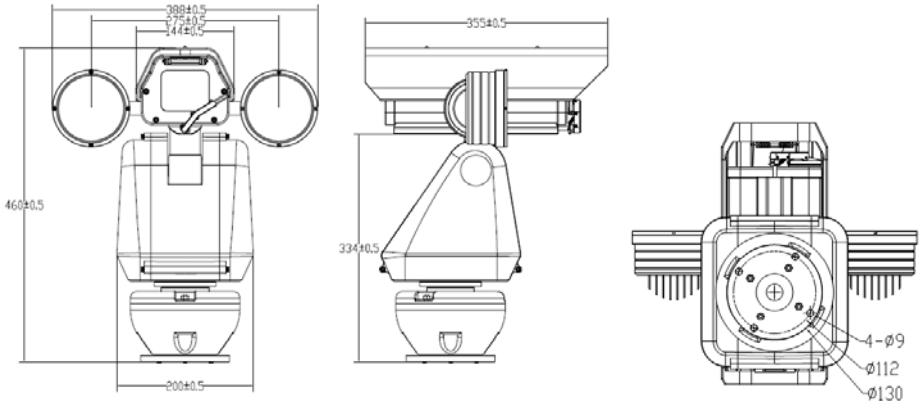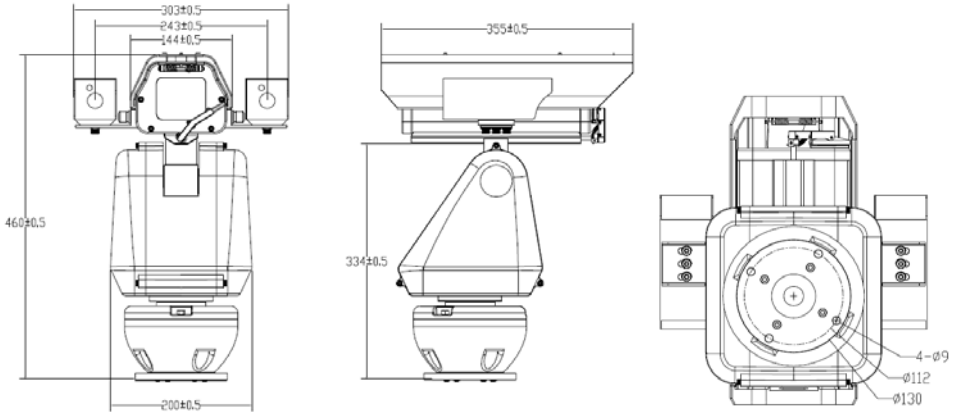
Unit Dimension