Josefina Pan
Pacific Limited
TAIWAN

2021 Catalog

2.4GHz Digital Wireless

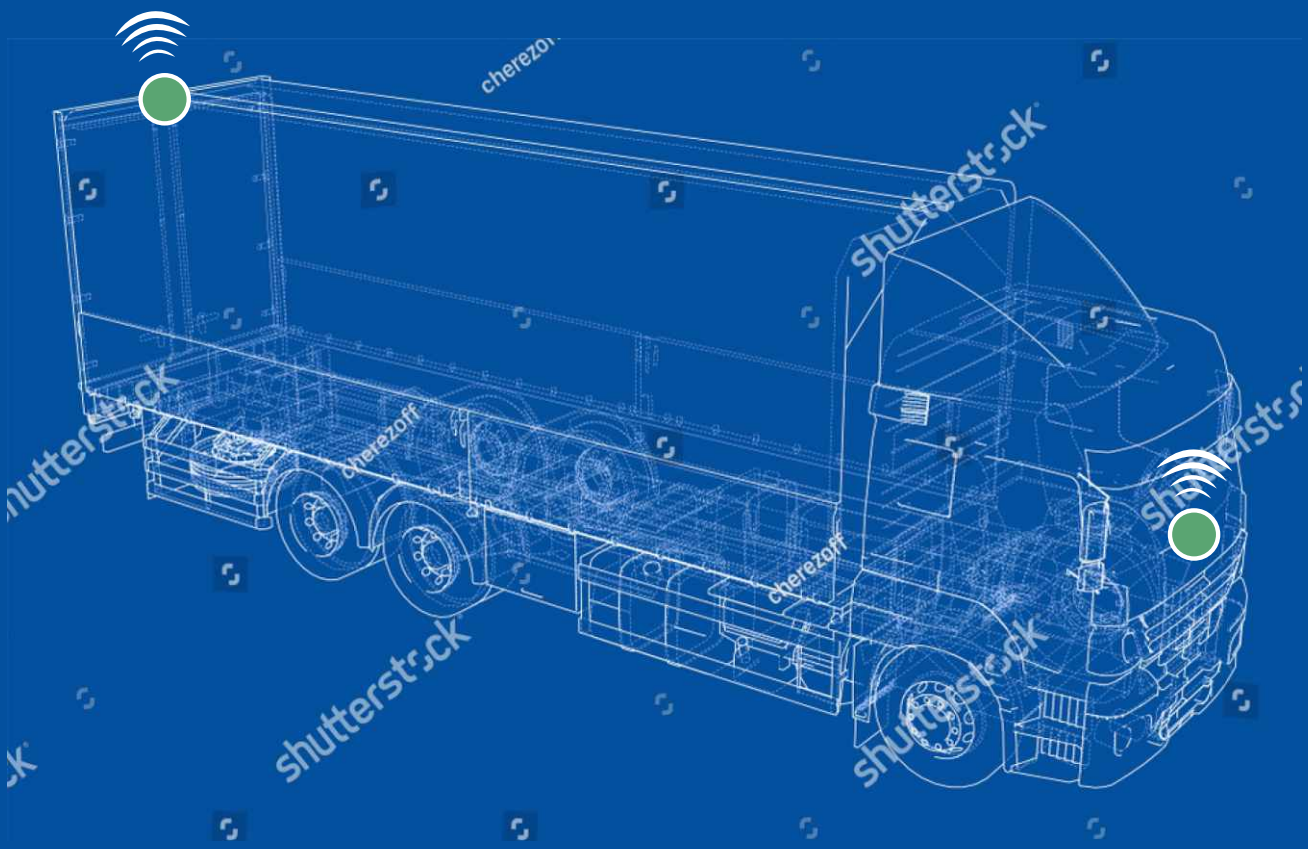

2.4GHz Digital Wireless

MODEL
MTR-CTR431WKL

MODEL
MTR-CTR431WKM

MODEL
MTR-CTR520WKL

MODEL
MTR-CTR520WKM

Monitor Specification OPTION AHD Monior

Screen Size	4.3" & 5" Digital Panel
Resolution	482 x 272
Display Format	16:9
Power Brightness	300 & 400 cd/m²
Power Voltage	DC 12-24V

Camera Specification OPTION AHD Camera

Image Sensor	1/4" CMOS
Resolution	600 TV Lines
View Angle	120° (D)
IR LED	5 LEDs
Power Voltage	DC12-24V
Waterproof Rating	IP68

Standard
Bayonet Bracket

Option
Magnetic Bracket

Highway Speed VS no Video Loss

MODEL
MTR-CTR50WK

Driving Speed 70~80 Miles
Video Signal Stable

- Support AHD / TVI / CVI / CVBS
- For Car, Truck, Tractor Trailer, RV and Marine
- Wireless product success in "no video loss" upon driving speed of 70-80 miles and transmission distance is up to 65 Meter

Monitor Specification

Screen Size	5" Digital Panel
Resolution	800 x 480
Display Format	16:9
Power Brightness	500 cd/㎡
Video Input	4CH
Power Voltage	DC 12-32V

Camera Specification

Image Sensor	1/3" SHARP CCD
Resolution	512 x 492
View Angle	110° (D)
Waterproof	IP 69K
Power Voltage	DC 12-32V

MODEL
MTR-CM43WK CE FC RoHS conform RED

Standard:
Suction Cup

OPTION
I stand

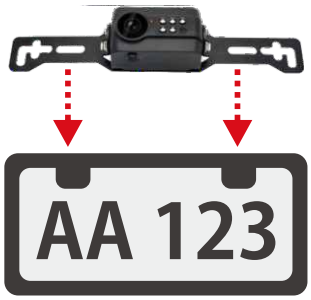

Monitor Specification

Screen Size	4.3" Digital Panel
Resolution	480 x 272
Display Format	16:9
Brightness	400 cd/㎡
Video Input	1CH
Power Voltage	DC 6-32V

Camera Specification

Image Sensor	1/4" CMOS OV7725
Resolution	640 x 480
View Angle	120° (D)
IR LED	5 LEDs
Power Voltage	DC10-32V
Waterproof Rating	IP68

2.4GHz Digital Wireless

MODEL
MTR-CM42WK

Monitor Specification

Screen Size	4.3" Digital Panel
Resolution	640 x 480
Video Input	1CH
Power Voltage	DC 7-15V

Camera Specification

Image Sensor	1/4" CMOS
Resolution	648 x 488
View Angle	120° (D)
IR LED	5 LEDs
Power Voltage	DC 5-12V
Waterproof Rating	IP68

MODEL
TR-CTR302/A

- Power Supply : DC 12V-32V
- Latency : 150mS Max
- Resolution : AHD 720P, 1080P
- Operation Frequency : 2400 ~ 2483MHz
- Spread Spectrum : FHSS

MODEL
TR-CTR989

WIRELESS CAMERA

Camera Specification

Image Sensor	1/3" COLOR CCD
Resolution	512 x 492
View Angle	110° (D)
IR LED	10 LEDs
Waterproof	IP 69K
Power Voltage	DC 12-32 V

2.4GHz Digital Wireless

MODEL
MTR-CM67211WK/A

IP69K | Rugged Design | Auto Reverse

Monitor Specification

Screen Size	7" LED Digital Panel
Resolution	1024 x 600
Format	16:9
Brightness	450 cd/m²
Video Input	2 Video in
Power Voltage	DC 12-32V

Camera Specification

Image Sensor	1/3" CMOS AHD
Resolution	720P
View Angle	110° (D)
Waterproof / IR	IP 69K / 10 LEDs
Power Voltage	DC 8-32V

---

1 CH / 2 CH / 3 CH / 4 CH Available

MODEL
MTR-CM7006WKD/MQ

Built-in DVR
Support up to 128GB SD Card

Monitor Specification

Screen Size	7" Digital Panel
Resolution	800 x 480
Format	16:9
Brightness	400 cd/m²
Video Input	1/2/3/4 Video in
Power Voltage	DC 12-32V

Camera Specification

Image Sensor	1/4" PC7030N
Resolution	640 x 480
View Angle	120° (D)
Waterproof/ IR	IP 68 / 18 LEDs
Power Voltage	DC 12-32 V
Option	H7440 CMOS

MTR-CM7006WK

MTR-CM7006WK2

MTR-CM7006WK3

MTR-CM7006WK4

MODEL
MTR-CTR430WK CE FC RoHS conform RED TELCE

OPTIO License Plate

Monitor Specification

Screen Size	4.3" Digital Panel
Resolution	480 x 272
Format	16:9
Power Voltage	DC 12-24 V

Camera Specification

Image Sensor	1/3" CMOS
Resolution	480 x 272
View Angle	170° (D)
Waterproof	IP 68
Power Voltage	DC 12-24V

MODEL
MTR-CM7010WK/A E24 RED

Monitor Specification

Screen Size	7" Digital Panel
Resolution	1024 x 600
Format	16:9
Brightness	300 cd/m²
Power Voltage	DC 12-24V

Camera Specification

Image Sensor	1/4" CMOS OV7725
Resolution	1280 x 720
View Angle	120° (D)
Waterproof / IR	IP 67 / 17 LEDs
Power Voltage	DC 12-24V

MODEL
MTR-CM9010WK E24 RED

Monitor Specification

Screen Size	9" Digital Panel
Resolution	800 x 480
Format	16:9
Brightness	250-300 cd/m²
Power Voltage	DC 12-24 V

Camera Specification

Image Sensor	1/4" CMOS OV7725
Resolution	640 x 480
View Angle	120° (D)
Waterproof / IR	IP 67 / 17 LEDs
Power Voltage	DC 12-24V