AVERLOGIC

Video Solutions Provider

Color & Sound

AL582

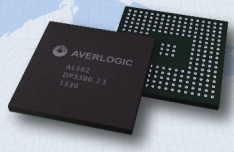

H.264 Video Streaming SOC

used with HD Wireless Applications

Imagine: "Eye" on your Home 24/7

Professional surveillance cameras are already in full use in stores, buildings, public spaces as an indispensible security tool and criminal deterrent. But residential homes have been slow to adapt because of cost, power consumption and complicated installation / maintenance. What if there were cost-effective, plug-and-play, low-power, wireless HD video monitoring devices for Home Use to help you keep an eye on babies, pets, plants, cars, entrance-ways. The time is right, and it just got easier with the AverLogic AL582, an H.264 Video Streaming SOC used with Wireless Home Monitoring devices. The AL582 features a stable, well-defined developer interface to help with timely, efficient development to get your product on the fast-track to market.

Features

- Embedded MCU80251 (OS not necessary), H.264 encoder/decoder
- Data and Control Interfaces: SDIO for SD card, SPI for Wi-Fi/RF module, Low voltage detection for battery, UART, interrupt and GPIO for MCU user interface control.

Features

- H.264 720p codec, scaling, de-interlacing, format conversion, video freeze, zoom, flip, mirror, rotation, motion detection and more.
- Inputs: RGB888, BT.1120, YCbCr, BT.656
- Outputs: RGB888, BT.1120, YCbCr, BT.656, Analog RGB DAC,CVBS

AverLogic
www.averlogic.com
sales@averlogic.com

Copyright 2014 AverLogic Technologies, Corp. All rights reserved.

AVERLOGIC

AL582 H.264 Video Streaming SOC

Wireless H.264 HD Video Streaming Security Camera

Cams, Cams, Cams

MCU & Control Interfaces

- Supports Adaptive Frequency Hopping for countering inteference from Wi-Fi and other 2.4G wireless sources
- Embedded MCU80251
- Seamless recording to SDHC 4~32G SD cards
- Supports multi-channel connections (Single TX to multiple RXs and multiple TXs to single RX)
- Provides data protection during RF/Wi-Fi streaming
- One button auto configuration without complex handshaking protocols during device pairing
- Farther transmission distances (150~250m depending on video resolution)
- Embedded Voltage controller and power management

Video Input

- 8-bit CMOS Sensor and ISP chip YCbCr
- 24-bit RGB888
- 20-bit BT.1120 and 16-bit YCbCr
- 8-bit BT.656
- Video bypass mode

Video Output

- 24-bit RGB888
- 20-bit BT.1120 and 16-bit YCbCr
- 8-bit BT.656
- Supports digital LCD panels: 160x120, 320x240, 640x480, 800x480, 800x600 and more ...
- Embedded Analog RGB DAC
- Embedded TV Encoder CVBS

Video Processing and Scaling

- H.264 1280x720 30p Base Line/High Profile compression codec
- 1920x1080 JPEG compression codec
- Video scaling engine (scale up/down) up to 1080 60p
- De-interlacing video engine
- Supports video freeze, zoom, flip, mirror, rotation, motion detection and more
- Video contrast-brightness-hue-sharpness adjustment
- Supports low latency transmission
- Supports Quad displays

Audio Processing

- Embedded 24-bit audio codec
- Supports two-way stereo audio

OSD

- Embedded 2-layer 256 color OSD engine

Miscellaneous

- Low power consumption
- Small footprint package LFBGA-249 12x12 mm
- H.264 encoder and decoder
- 1.2V/1.8V core logic, 3.3V I/O
- Embedded Low Power DDR-SDRAM
- Embedded MCU80251
- Self contained SOC, rich with abundant resources, interfaces, and options - i.e. straightforward, hassle-free, fast development

Block Diagram

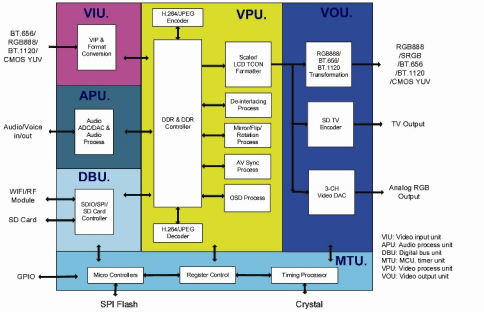

AverLogic Technologies, Corp.

Email Contact
sales@averlogic.com

Telephone Contact
+1-408-526-0400 (USA)
+886-2-8752-3988 (Taiwan)

Website
www.averlogic.com

Ordering Information

Part Number	Description	Content
AL582C	H.264 AV Streaming SOC	
AL582C-EVB-A0	AL582C EVB	AL582C-EVB-A0