LS-QHD500DV 5 Mega 360 degree Panoramic IP camera

Key Features:

- UP to 5 megapixel resolution(2592×1920)
- Max 10fps@5MP(2592×1920)&25/30fps@1080p(1920×1080)
- H.264&MJPEG dual-stream encoding
- Advanced H.264 High Profile Level@4 compression
- Panoramic Lens(1.37mm)
- Day/Night(ICR)&3D DNR&AWB&AGC&BLC
- Alarm&Audio&RS485 interface(only for Full Function model)
- Support mobile phone monitoring and P2P function
- POE function(optional)
- IP66

Specification:

Model NO.	LS-QHD500DV
Media Processor	High-performance TI DaVinci DSP
Image Sensor	1/2.5" 5MP progressive scan CMOS
Shuttle time	1/5s to 1/50,000s
Lens	Panoramic Lens 1.37mm
Horizontal Angle of View	183°
Day&Night	IR cut filter with auto switch

Compression	
Video Compression	H.264/MJPEG
H.264 coding standard	H.264 Baseline/MainProfile/HighProfile
Audio Compression	G.711a/G.711u/RAW_PCM
Audio Bit Rate	G.711a(8kbps)/G.711u(8kbps)/RAW_PCM(16kbps)
Image	
Max Image Size	2592(H)×1920(V)
Stream	Dual-stream
Frame Rate	Main Stream: 50Hz:10fps (2592 ×1920) 20fps (2048 ×1536) 60Hz:10fps (2592 ×1920) 20fps (2048 ×1536)
Network	
Alarm Trigger	Motion detection, tampering alarm, network disconnect, storage exception
Protocols	IPv4/IPv6, RTSP/RTP/RTCP, TCP/UDP, HTTP, DHCP, DNS, FTP, DDNS, PPPoE, SMTP, Onvif V2.4
Onvif	V2.4 Version
Interface	
Network	1 RJ45 10M/100M adaptive Ethernet port
Reset	A reset button (press and hold 3 seconds valid)
General Specifications	
Operating Conditions	-40℃ ~ 60℃,humidty less than 95%
Power Supply	DC12V±10%(POE optional)
Power Consumption	4.5W
Weather proof rating	IP66
Dimensions(mm)	120 X 120X 68
Weight(kg)	0.42

Dimensions:

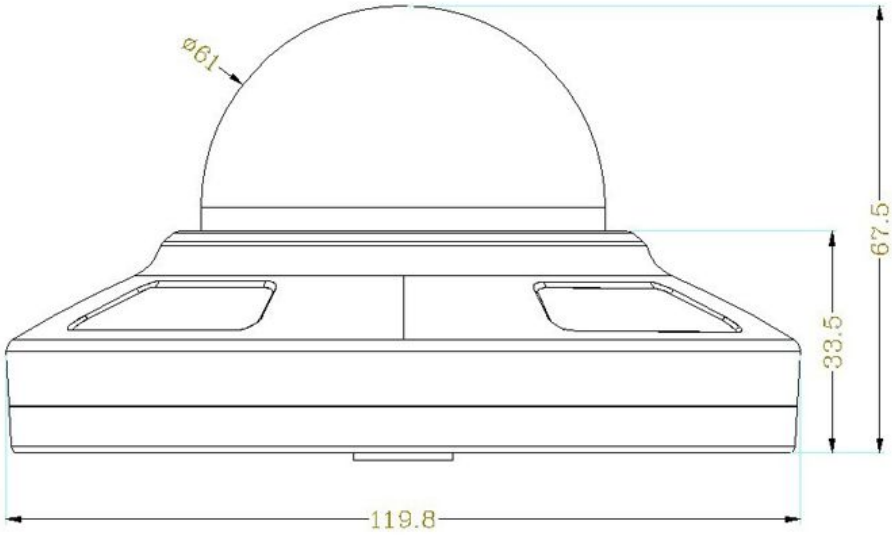

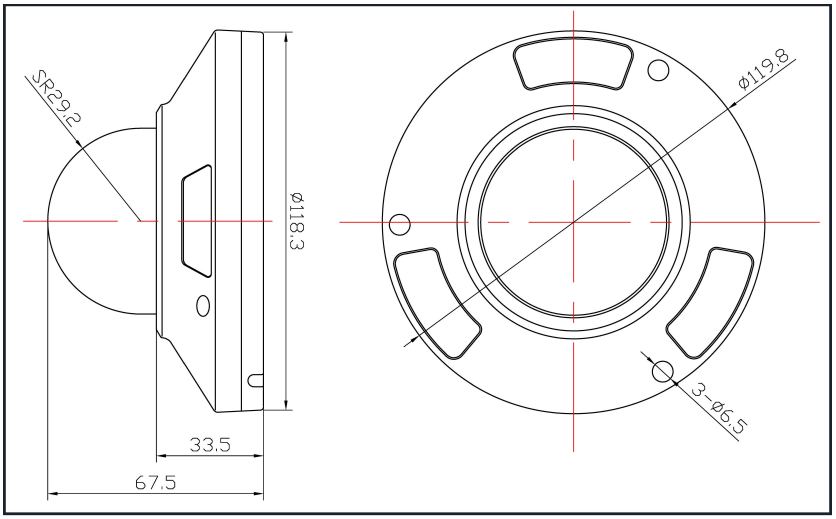

Interface Cable:

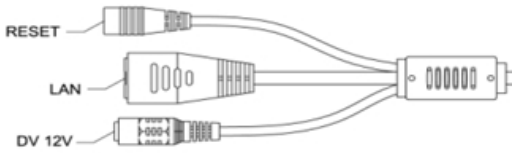

Basic Function