www.sbcctv.co.kr

ISO14001 ISO9001

SAMBO HITECH CO., LTD.

PRODUCT CATALOGUE

- CCTV CAMERA
- LCD / CCD MODULE
- CAR REARVIEW CAMERA

SINCE 1991
SAMBO
SAMBO HITECH CO.,LTD.

HD-SDI High Performance HD-SDI Camera

KEY FEATURES

1/3" 2.1M Panasonic CMOS
FULL HD Resolution : 1100TVL
1920 x 1080 pixel / 30fps, 1280 x 720 pixel / 60fps
WDR / 3D-DNR / SENS-UP / D.ZOOM /
Motion Detection / Privacy Masking / DEFOG
Built-in OSD key (Internal adjustment)
Video Out : HD-SDI & Analogue (CVBS)
2.8~12 mm Varifocal Lens (MEGA), DC IRIS, ICR
RS485 / PELCO-D / PELCO-P
Dimension(mm) : Φ(90+125) X 83(mm)
Power Source : DC12V (6.5V ~ 28V)

SD10SHI920V1F SD10SHM900V1F

DIMENSION

unit :mm

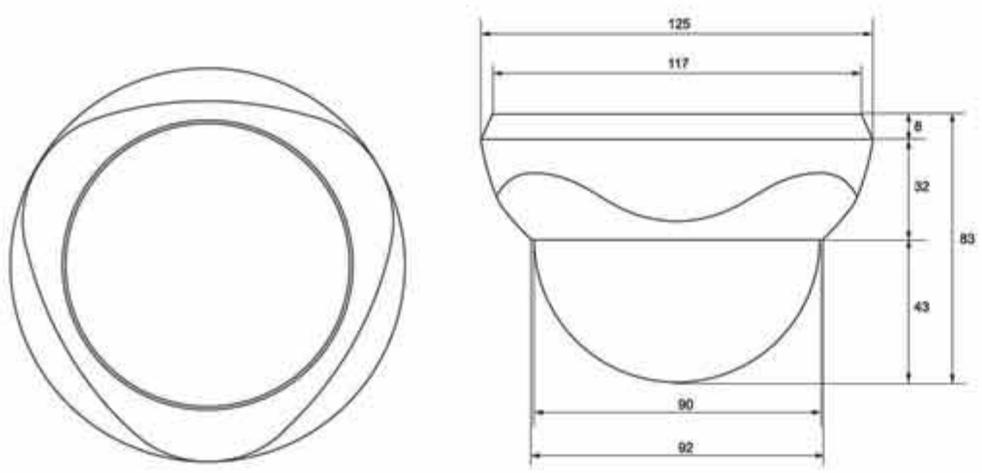

SPECIFICATION

Signal System		NTSC	PAL
Image Sensor		1/3" 2.1M CMOS Image sensor	
Total Pixels / Effective Pixels		2010(H) x 1108(V) 2.227,080 pixel	1944(H) x 1092(V) 2.122,848 pixel
Processor		NEXT Eagle 2421 ISP	
Sync. Type		Internal	
Shutter Speed		NTSC : 1/60sec ~1/50,000sec	1/50sec ~1/50,000sec
Horizontal Resolution		More than 1000TVL	
S/N Ratio		Less than 50dB	
Video Output		HD-SDI smpte 292m(750 hm) / CVBS 1.0Vp-p (75ohm)	
Min Illumination		0.005 LUX	
Lens		2.8~12mm DC IRIS VARIFOCAL / ICR LENS (mega)	
IR LEDs		OPTICAL 20 IR LEDs (IR RANGE : 20 m)	
OSD		INTERNALLY BUILT-IN ADJUSTABLE OSD KEY	
OSD FUNCTIONS	LENS	DC / VIDEO /MANUAL	
	Exposure	SHUTTER/AGC/SENS-UP/BRIGHTNESS/ACCE/DEGOG/BACKLIGHT	
	White Balance	ATW / AWC->SET / MANUAL /INDOOR/OUTDOOR	
	DAY & NIGHT	COLOR / AUTO / BW / EXT	
	NR	3D-DNR / 2D-DNR / SMART NR	
	SPECIAL	CAMTITLE/D-EFFECT/MOTION/PRIVACY/LANGUAGE/DEFECT/RS485	
	ADJUST	SHARPNESS / MONITOR / OSD /LSC / NTSC-PAL	
	RESET	FACTORY	
OSD LANGUAGE		16 LANGUAGES	
Operation Temp. & Storage Temp.		-10 ℃~50 ℃ / -20℃~60 ℃	
Dimension (mm)		Φ(90+125) X 83 (mm)	
Power Supply		DC12V (DC6.5V ~ 28V)	

HD-SDI COMPARISON IMAGE

HD-SDI

ANALOG HD-SDI

SAMBO's HD-SDI offers digital Zoom and PIP function. Zoom can be from x 2 to x 64 and in the case of PIP, it can be from 1/9 to 1/16.

DEFOG

DEFOG OFF DEFOG ON

Images in the extraordinary environment such as fog or rain or in a very strong Luminous intensity have DR (dynamic range),Lower than ordinary images. NVP2400 has a contrast-based defog function, which is used to overcome such shortcoming

ACCE

ACCE OFF ACCE ON

ACCE block performs an image enhancement processing to enhance visibility of an image by changing the brightness values to the level that people can recognize the change. This dynamic range reduction technique (High & Low Dynamic Range) is one of the WDR technologies.Through this the contrast ratio of the image can be effectiveely expressed and the edge information can be improved in order to enhance the overall visibility of the image

D-ZOOM. PIP

Digital - ZOOM & PIP

D-ZOOM(X4)&PIP(1/9)@1920(H)x1080(V)

3D,2D-DNR

3D,2D-DNR OFF 3D,2D-DNR ON

SAMBO'S unique 3D Adaptive Noise Reduction Filter effectively removes the Noise from the image signal,providing a more vivid and clear image.When using the AGC in low-lightings. clear image can be obtained by reducing Noise, and even in darker areas, brighter images can be obtained by using higher AGC

HIGH RESOLUTION

CONVENTIONAL 1100TVL

1100TVL camera guarantees to show higher Quality image. You do not need to stare at the image because of unclear area in the image.

HD-SDI Models

TYPE	MODEL	IMAGE	IR	LENS	D&N	OSD	SPECIALTY & OPTION
IR BULLET CAMERA	SCI924R-T		24 EA	3.6 / 4 mm	TDN	OSD Controller	Heater type IP66
	SSI900R-T		—	3.6 / 4 mm	TDN	OSD Controller	IP66
	SCI934V1EF		34 EA	2.8~12 mm	TDN	External OSD	Heater type IP66
	SCI954V1EF		54 EA	2.8~12/6~50mm	TDN	External OSD	Heater type IP66
	SCI972V1EF		72 EA	6~50 mm			
	SNI930F-T		30 EA	3.6 mm	TDN	Internal OSD	Heater type IP66
	SNI920V1F		20 EA	2.8~12 mm			
	SNI940V1F		40 / 50 EA	2.8~12 / 6~22 / 3.6mm	TDN	Internal OSD	Heater type IP66
	SNI9303V1F		30 + 3 EA	6~50 mm			
	SSI940V1EF		40 EA	2.8~12/6~22 mm	TDN	Built-in OSD Key	Heater type IP66
	SSI9303V1EF		30 + 3 EA	6~50 mm			
	SDI940X2ZF		40 EA	X3 ZOOM	TDN	Built-in OSD Key	Heater type IP66
DOME CAMERA	SVD10SHI920V1F		20/30 EA	2.8~12/6~22 mm	TDN	Built-in OSD Key	IP66
	SVD10SHM920V1F		—	2.8~12/6~22 mm	TDN	Built-in OSD Key	IP66
	SVD07SHI924R-T		24 EA	3.6 / 4mm	TDN	OSD Controller	IP66
	SVD07SHI900R-T		—				
	SD10SHI920V1F		20 EA	2.8~12/6~22 mm	TDN	Built-in OSD Key	IP66
	SD10SHI900V1F		—	2.8~12/6~22 mm			
	SD10SHI925F-T		25 EA	3.6 mm	TDN	Built-in OSD Key	IP66
	SD10SHM900F		—	3.6 mm	DDN		
	D07SHI912R-T		12 EA	3.6 mm	TDN	OSD Controller	
	D07SHM900R		—	3.6 mm	DDN		
	CD10SHI924V1F		24 EA	2.8~12 mm	TDN	Built-in OSD Key	
	CD10SHM900V1F		—	6~22 mm			
BOX CAMERA	SHC900-T		—	—	MECHANICAL TDN	Built-in OSD Key	Dual Voltage
MINIATURE CAMERA	SHS900		—	3.6 / 3.7 mm pin hole	DDN	Built-in OSD Key	
			—	2.8~12 mm			
BULLET CAMERA	SHB926H		—	3.6 / 4~9 / 3.5~16 / 9~22mm	DDN	OSD Controller	
HD-SDI ACCESSORY	CONVERTER &REPEATER		HD-SDI VIDEO INPUT HD-SDI(HDMI) OUTPUT		HD-SDI SIGNAL EXTENDED HD-SDI VIDEO LOSS LED DISPLAY		
	MONITOR		FULL HD LED,LCD MONITOR HD-SDI,BNC,HDMI,DVI,NGA 32"42"47"55" WIDE ANGLE				

P3 Raptor High Performance 700TVL / WDR / 3D-DNR Camera

KEY FEATURES

1/3" SONY SUPER HAD II / EXVIEW II CCD (960H)
HIGH RESOLUTION 700TVL
WDR / 3D-DNR / HSBLC
Sens-up (~x512) / Motion Detection /
Defog / Privacy Masking
Multi Language OSD, External adjustable OSD key
Digital Effect (Mirror, Rotate, V-flip)
Digital Zoom x16, Defog
6~50mm Varifocal Lens, ICR, DC IRIS
30+3 IR LEDs (IR VALID 70m)
Dimension(mm) : Φ84 X 291(mm)
Power Source : DC12V (6.5V ~28V)
Option : Coaxial communication (UTC)
Heater System

SSI4303XHV1EF

DIMENSION

unit :mm

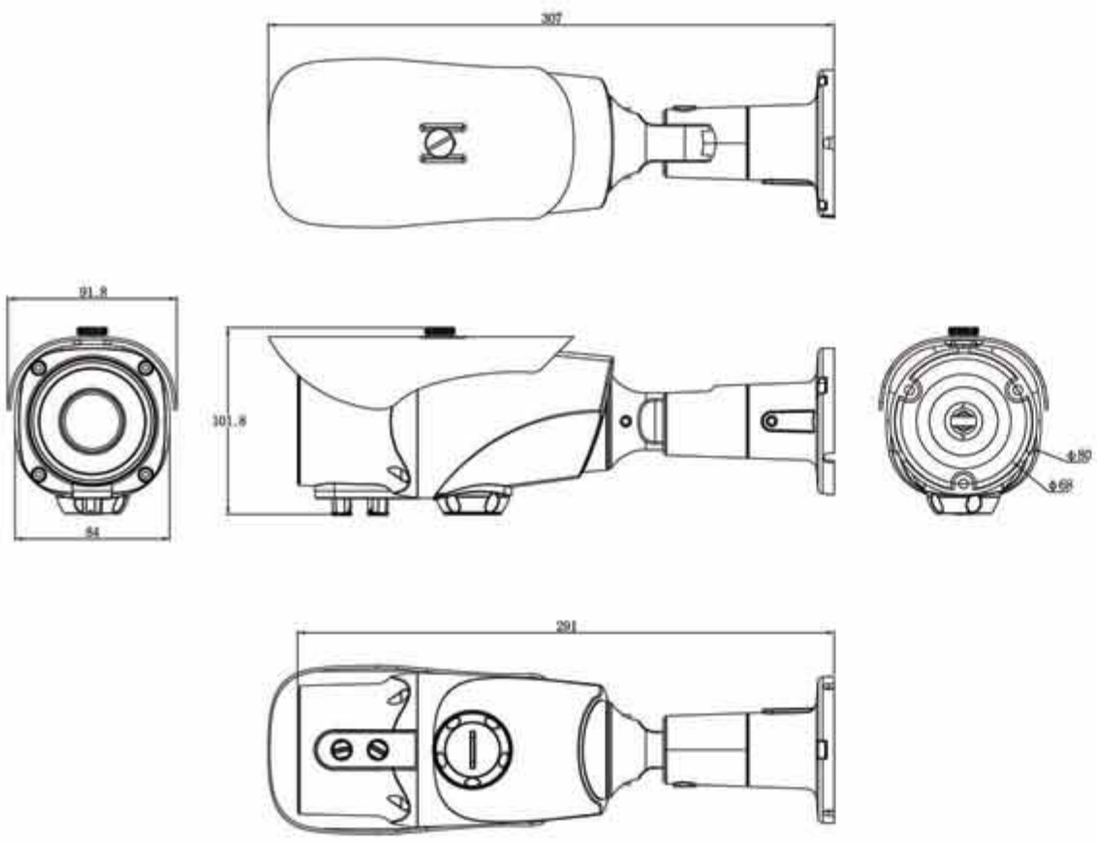

SPECIFICATION

Signal System		NTSC	PAL
Image Sensor		1/3" SONY SUPER HAD II CCD (960H)	
Total Pixels / Effective Pixels		1020(H) x 508(V)	1020(H) x 596(V)
Processor		RAPTOR, P3	
Sync. Type		Internal	
Scanning Frequency (Horizontal)		15.735KHz	15.625KHz
Scanning Frequency (Vertical)		59.94Hz	50Hz
Horizontal Resolution		700TVL	
S/N Ratio		Less than 50dB	
Video Output		CVBS 1.0Vp-p (75ohm)	
Min. Illumination		Color Mode:0.0003(Sens-up Auto,F1.2), B/W mode:0.00003(Sens-up Auto,F1.2)	
Lens		6~50MM VARIFOCAL LENS (F1.6)	
IR LEDs		30+3IR LEDs (IR RANGE: 70mt)	
OSD		EXTERNALLY ADJUSTABLE OSD KEY	
OSD FUNCTIONS	Exposure	ELC / ALC	
	White Balance	ATW(1600°K ~ 11,000°K) / AUTO / ONE PUSH / MANUAL	
	Auto Gain Control	OFF / LOW / MIDDLE / HIGH	
	Electronic Shutter	1/60 ~ 1/120,000	1/50 ~ 1/120,000
	Backlight Compensation	OFF / WDR / BLC / HSBLC	
	Sens-up	OFF / AUTO(X4) / MANUAL(X2 ... X 512)	
	Day & Night	DAY / NIGHT / AUTO	
	Digital Zoom	~ x 16	
	Privacy Zone Masking	Retangle: 8 Areas, Circle: 4 Areas, Polygon: 2 Areas	
	Motion Detection	8 Regions	
	3D-DNR	Level 100 Steps	
	Defog	ON / OFF	
	Digital Effect	OFF / V-Flip / Mirror / Rotate	
OSD Language		English/Chinese,Korean,Japanese,French,Italian,Spanish,Portuguese, Dutch,German,Polish,Russian,Turkish,Arbic,Hebrew	
Operation Temp. & Storage Temp.		-10℃~50℃ / -20 ℃~60℃	
Communication		Coaxial commumication (UTC)	
Dimension (mm)		Φ84 X 291(mm)	
Power Supply		DC12V (DC6.5V ~ 28V)	

P3 Raptor COMPARISON IMAGE

WDR

WDR OFF — WDR ON

SAMBO'S unique technology,Advanced Fast histogram equalizer/ Adaptive LUT / Local Contrast enhancement, allows dark portions of a bright image to be shown clear, enhancing details in the WDR image and removing noise.

3D - DNR

3D-DNR OFF — 3D-DNR ON

SAMBO'S unique 3D Adaptive Noise Reduction Filter effectively removes the Noise from the image signal,providing a more vivid and clear image.When using the AGC in low-lightings. clear image can be obtained by reducing Noise, and even in darker areas, brighter images can be obtained by using higher AGC

SENS - UP

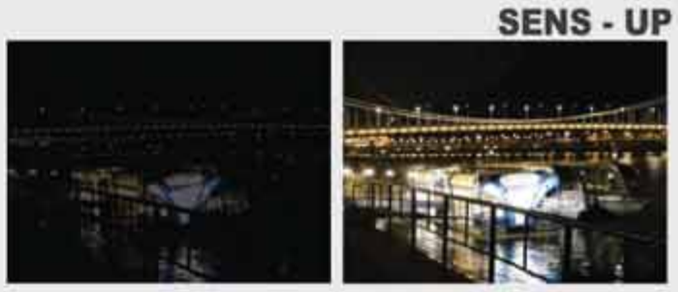

SENS-UP OFF — SENS-UP ON

Generally,sensitivity is increased according to the exposure time by increasing exposure time,sensitivity is further gained XQ ISP permits the high quality pictures to be captured under very low light condition

HSBLC

HSBLC OFF — HSBLC ON

SAMBO'S unique Adaptive luminance Control AE will darken selected highlights and brighten dark portions,in the picture, the number on the car plate can seen clearly

DEFOG

DEFOG OFF — DEFOG ON

Images in the extraordinary environment such as fog or rain or in a very strong Luminous intensity have DR (dynamic range), Lower than ordinary images. NVP2400 has a contrast-based defog function,which is used to overcome such shortcoming

HIGH RESOLUTION

CONVENTIONAL — 700TVL

TV Lines indicate the maximum number of identifiable changes that can be produced along a single scan line from an analog TV. SAMBO's analog surveillance cameras display a resolution that is more than 700TV Lines.

P3 Raptor Models

TYPE	MODEL	IMAGE	IR	LENS	D&N	OSD	SPECIALTY & OPTION
IR BULLET CAMERA	SCI424XHR		24 EA	3.6 / 4 mm	DDN	OSD Controller	Heater type IP66
	SSI424XHR		24 EA	3.6 / 4 mm	DDN	OSD Controller	
	SCI434XHV1EF		34 EA	2.8~12 mm	TDN	External OSD	Heater type IP66
	SCI454XHV1EF		54 EA	2.8~12/6~50mm	TDN	External OSD	Heater type IP66
	SCI472XHV1EF		72 EA	6~50 mm			
	SNI430XHF		30 EA	3.6 mm	DDN	Internal OSD	Heater type IP66
	SNI420XHV1F		20 EA	2.8~12 mm	TDN		
	SNI440XHV1F		40 / 50 EA	2.8~12 / 6~22 / 3.6mm	TDN	Internal OSD	Heater type IP66
	SNI4303XHV1F		30 + 3 EA	6~50 mm			
	SSI440XHV1EF		40 EA	2.8~12/6~22 mm	TDN	Built-in OSD Key	Heater type IP66
	SSI4303XHV1EF		30 + 3 EA	6~50 mm			
DOME CAMERA	SVD10SCI420XHV1F		20 EA	2.8~12/6~22mm	TDN	Built-in OSD Key	IP66
	SVD10SCM420XHVF		—	2.8~12/6~22mm	DDN	Built-in OSD Key	IP66
	SVD07SCI424XHR		24 EA	3.6 / 4mm	DDN	OSD Controller	IP66
	VD05SCI410XHR		10 EA	3.6 mm	DDN	OSD Controller	IP66
	VD05SCM400XHR		—	3.6 mm			
	VDF05SCI410XHR		10 EA	3.6 mm	DDN	OSD Controller	IP66
	VDF05SCM400XHR		—	3.6 mm			
	SD10SCI420XHV1F		20 EA	2.8~12/6~22mm	TDN	Built-in OSD Key	
	SD10SCM400XHVF		—	2.8~12/6~22mm	DDN		
	SD10SCI425XHV1F		25 EA	3.6 mm	DDN	Built-in OSD Key	
	SD10SCM400XHF		—	3.6 mm			
	D07SCI412XHR		12 EA	3.6 mm	DDN	OSD Controller	
	D07SCM400XHR		—	3.6 mm			
	CD10SCI424XHV1F		24 EA	2.8~12/6~22mm	TDN	Built-in OSD Key	
	CD10SCM400XHVF		—	2.8~12/6~22mm	DDN		
BOX CAMERA	SCC452XH		—	—	DDN	Built-in OSD Key	Dual Voltage Mechanical TDN
	SCC452XHD		—	—			
MINIATURE CAMERA	SDS400XH		—	3.6 mm	DDN	Option	33X33 mm
	SDS430XH			3.7/2.8~12 mm Pinhole		Built-in OSD Key	30X30 mm
BULLET CAMERA	SCB419XHR		—	3.6 mm	DDN	OSD Controller	IP66
	SCB426XHMVR			4~9 / 3.5~16 /9~22 mm			
SUNSHIELD CAMERA	SCB428XHR		—	3.6 mm	DDN	OSD Controller	IP66

Effio - V High Performance 750TVL / 3D-DNR / WDR Camera

KEY FEATURES

1/3" SONY 960H DOUBLE SCAN HAD II CCD
HIGH RESOLUTION 750TVL
Advanced WDR / 3D+2D-DNR / DEFOG / HLC
Frame Accumulation Function,
Intelligent Scene Recognition
Digital Image Stabilizer,
Lens Shading Compensation
IR Optimizer (Smart IR function)
Built-in OSD buttons – 8 Languages OSD
Dimension(mm) : 62.5 x 54 x119 (mm)
Power Source : DC12V (6.5 ~ 28V)

SCC152VH

DIMENSION

unit :mm

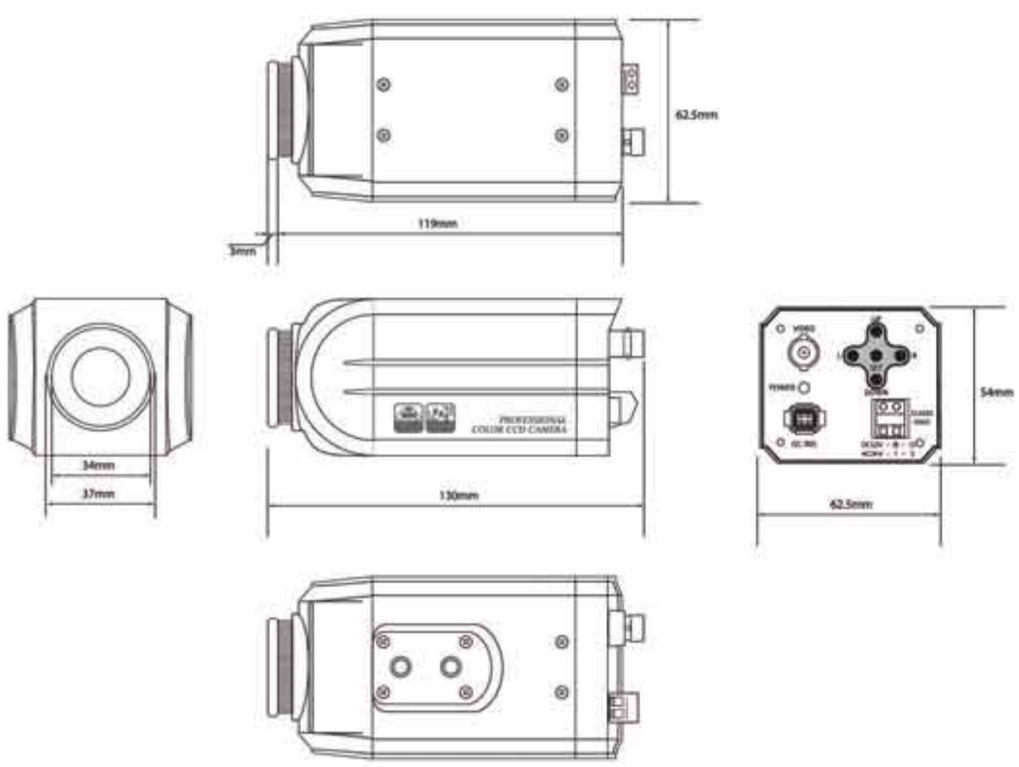

SPECIFICATION

Signal System		NTSC	PAL
Image Sensor		1/3" Sony 960H Super Had II CCD (Exview II)	
Total Pixels / Effective Pixels		1020(H) x 508(V)	1020(H) x 596(V)
Processor		Effio-V	
Sync. Type		Internal	
Scanning Frequency (Horizontal)		15.735 KHz	15.625 KHz
Scanning Frequency (Vertical)		59.94 Hz	50 Hz
Horizontal Resolution		750 TVL	
S/N Ratio		More than 50dB	
Video Output		CVBS 1.0 p-p (75 Ohm)	
Min Illumination		0.005 Lux (F1.2), 0 Lux(if IR-ON)	
Lens		CS Mount / C mount - option	
OSD		Built-in OSD buttons	
OSD FUNCTIONS	White Balance	ATW/Push/User 1/User 2/Anti CR/Manual/Push-lock	
	Exposure	AUTO / LOW LUMINANCE / HIGH LUMINANCE	
	Shutter Speed	Auto/manual(1/60~1/10,000)	Auto/Manual(1/50~1/10,000)
	Privacy Masking	Off / On (15 areas)	
	Day & Night	Auto / Color / BW / Ext 1 / Ext 2	
	Motion Detection	4 Areas(24 x 16 blocks)	
	WDR	Off / D-WDR / S-WDR / HLC / BLC	
	3D-DNR	3D / 2D / 2D+3D	
	Digital Effect	Off / Mirror / DIS / EZOOM / SHARPNESS / HUE / R.B.-GAIN	
	Defog	ON / OFF	
	LANGUAGES	8 Languages	
Communication		Option (RS485 / Coaxial communication)	
Operation Temp. & Storage Temp.		-10°C ~ 50°C / -20°C ~ 60°C	
Dimension (mm)		62.5X54X119	
Power Supply		DC12V (6.5V ~ 28V), - Optional Dual voltage(DC12V/AC24V)	

EFFIO-V COMPARISON IMAGE

WDR

WDR OFF — WDR ON

SAMBO'S unique technology,Advanced Fast histogram equalizer/ Adaptive LUT / Local Contrast enhancement, allows dark portions of a bright image to be shown clear, enhancing details in the WDR image and removing noise.

3D - DNR

3D-DNR OFF — 3D-DNR ON

SAMBO'S unique 3D Adaptive Noise Reduction Filter effectively removes the Noise from the image signal,providing a more vivid and clear image.When using the AGC in low-lightings. clear image can be obtained by reducing Noise, and even in darker areas, brighter images can be obtained by using higher AGC

SENS - UP

SENS-UP OFF — SENS-UP ON

Generally,sensitivity is increased according to the exposure time by increasing exposure time,sensitivity is further gained XQ ISP permits the high quality pictures to be captured under very low light condition

DEFOG

DEFOG OFF — DEFOG ON

Images in the extraordinary environment such as fog or rain or in a very strong Luminous intensity have DR (dynamic range), Lower than ordinary images. NVP2400 has a contrast-based defog function,which is used to overcome such shortcoming

HIGH RESOLUTION

CONVENTIONAL — 750TVL

TV Lines indicate the maximum number of identifiable changes that can be produced along a single scan line from an analog TV. SAMBO's analog surveillance cameras display a resolution that is more than 750TV Lines.

HSBLC

HSBLC OFF — HSBLC ON

SAMBO'S unique Adaptive luminance Control AE will darken selected highlights and brighten dark portions,in the picture, the number on the car plate can seen clearly

Effio-V Models

TYPE	MODEL	IMAGE	IR	LENS	D&N	OSD	SPECIALTY & OPTION
IR BULLET CAMERA	SCI124VHR		24 EA	3.6 / 4 mm	DDN	OSD Controller	Heater type IP66
	SSI124VHR		24 EA	3.6 / 4 mm	DDN	OSD Controller	IP66
	SCI134VHV1EF		34 EA	2.8~12 mm	TDN	External OSD	Heater type IP66
	SCI154VHV1EF		54 EA	2.8~12/6~50mm	TDN	External OSD	Heater type IP66
	SCI172VHV1EF		72 EA	6~50 mm			
	SNI130VHF		30 EA	3.6 mm	DDN	Internal OSD	Heater type IP66
	SNI120VHV1F		20 EA	2.8~12 mm	TDN		
	SNI140VHV1F		40 / 50 EA	2.8~12 / 6~22 / 3.6mm	TDN	Internal OSD	Heater type IP66
	SNI1303VHV1F		30 + 3 EA	6~50 mm			
	SSI140VHV1EF		40 EA	2.8~12/6~22 mm	TDN	External OSD	Heater type IP66
	SSI1303VHV1EF		30 + 3 EA	6~50 mm			
DOME CAMERA	SVD10SCI120VHV1F		20/30 EA	2.8~12/6~22mm	TDN	Built-in OSD Key	IP66
	SVD10SCM120VHVF		—	2.8~12/6~22mm	DDN	Built-in OSD Key	IP66
	SVD07SCI124VHR		24 EA	3.6 / 4mm	DDN	OSD Controller	IP66
	VD05SCI110VHR		10 EA	3.6 mm	DDN	OSD Controller	IP66
	VD05SCM100VHR		—	3.6 mm			
	VDF05SCI110VHR		10 EA	3.6 mm	DDN	OSD Controller	IP66
	VDF05SCM100VHR		—	3.6 mm			
	SD10SCI120VHV1F		20 EA	2.8~12/6~22mm	TDN	Built-in OSD Key	
	SD10SCM100VHVF		—	2.8~12/6~22mm	DDN		
	SD10SCI125VHF		25 EA	3.6 mm	DDN	Built-in OSD Key	
	SD10SCM100VHF		—	3.6 mm			
	D07SCI112VHR		12 EA	3.6 mm	TDN	OSD Controller	
	D07SCM100VHR		—	3.6 mm	DDN		
	CD10SCI124VHV1F		24 EA	2.8~12 mm	TDN	Built-in OSD Key	
	CD10SCM100VHVF		—	2.8~12 mm	DDN		
BOX CAMERA	SCC152VH		—	—	DDN	Built-in OSD Key	Dual Voltage Mechanical TDN
	SCC152VH-T		—	—			
MINIATURE CAMERA	SDS130VHF		—	3.6 mm 3.7(pin hole) 2.8~12mm	DDN	Built-in OSD Key	30X30 mm
	SDS140VH					—	25X25 mm
BULLET CAMERA	SCB119VHR		—	3.6 mm	DDN	OSD Controller	
	SCB126VHMVR			4~9 / 3.5~16 /9~22 mm	TDN		IP66
SUNSHIELD CAMERA	SCB128VHR		—	3.6 mm	DDN	OSD Controller	IP66

Effio - A High Performance 750TVL / 3D-DNR Camera

KEY FEATURES

1/3" SONY 960H SUPER HAD II / EXVIEW II CCD
HIGH RESOLUTION 750TVL
3D+2D-Digital Noise Reduction
DEFOG / HLC / D-WDR
Electronic Zoom, Image Flip & Mirror
Intelligent Scene Recognition
Digital Image Stabilizer
IR Optimizer (Smart IR function)
OSD buttons – 8 Languages OSD
Dimension(mm) : ϕ(60+92) X 65 (mm)
Power Source : DC12V (6.5 ~ 28V)

VD05SCI110AHR **VDF05SCM100AHR**

DIMENSION

unit :mm

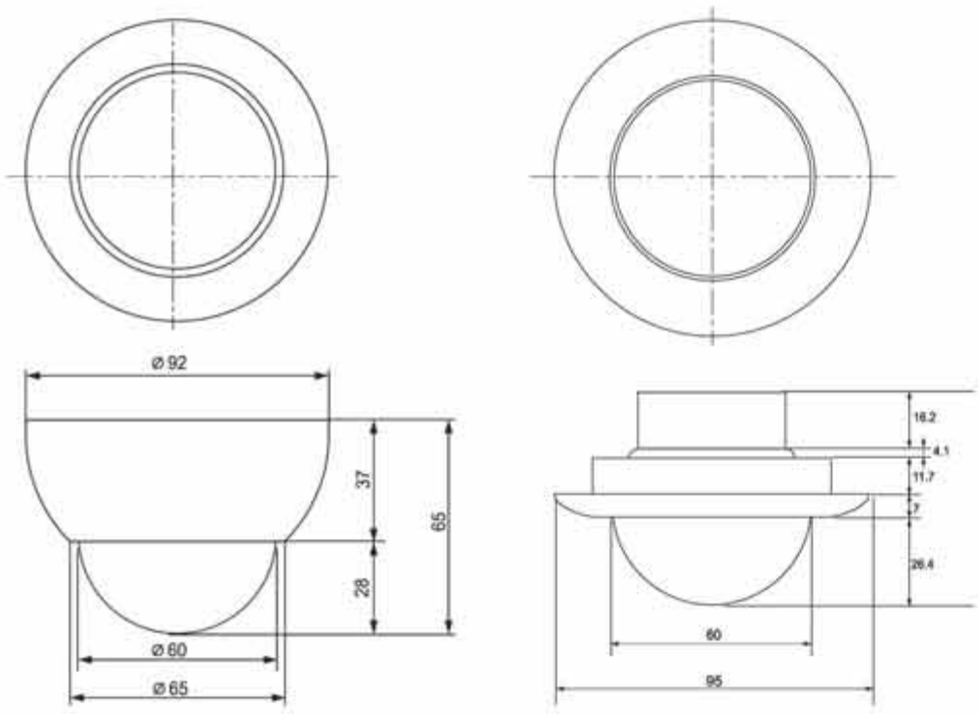

SPECIFICATION

Signal System		NTSC	PAL
Image Sensor		1/3" Sony 960H Super Had II CCD (Exview II)	
Total Pixels / Effective Pixels		1020(H) x 508(V)	1020(H) x 596(V)
Processor		Effio-A	
Sync. Type		Internal	
Scanning Frequency (Horizontal)		15.735 KHz	15.625 KHz
Scanning Frequency (Vertical)		59.94 Hz	50 Hz
Horizontal Resolution		750 TVL	
S/N Ratio		More than 50dB	
Video Output		CVBS 1.0 p-p (75 Ohm)	
Min Illumination		0.005 Lux (F1.2), 0 Lux(if IR-ON)	
Lens		3.6mm/4mm/6mm (Depending on the case)	
OSD (OPTION)		OSD CONTROLLER (Please don't apply for following OSD functions if no OSD selected)	
OSD FUNCTIONS	White Balance	ATW/Push/User 1/User 2/Anti CR/Manual/Push-lock	
	Exposure	UTO / LOW LUMINANCE / HIGH LUMINANCE	
	Shutter Speed	Auto/manual(1/60~1/10,000)	Auto/Manual(1/50~1/10,000)
	Privacy Masking	Off / On (15 areas)	
	Day & Night	Auto / Color / BW(SMART IR) / Ext 1 / Ext 2	
	Motion Detection	4 Areas(24 x 16 blocks)	
	BLC	Off / D-WDR / HLC / BLC	
	DNR	Off / 3D-DNR	
	Digital Effect	Off / Mirror / DIS / EZOOM / SHARPNESS / HUE / R.B.-GAIN	
	Defog	ON / OFF	
	LANGUAGES	8 Languages	
Communication		Option (RS485 / Coaxial communication)	
Operation Temp. & Storage Temp.		-10°C ~ 50°C / -20°C ~ 60°C	
Dimension (mm)		Φ(60 +92) x 65(mm)	
Power Supply		DC12V (6.5V ~ 28V)	

EFFIO-A COMPARISON IMAGE

3D - DNR

3D-DNR OFF 3D-DNR ON

SAMBO'S unique 3D Adaptive Noise Reduction Filter effectively removes the Noise from the image signal,providing a more vivid and clear image.When using the AGC in low-lightings.
clear image can be obtained by reducing Noise,
and even in darker areas,
brighter images can be obtained by using higher AGC

SMART IR

SMART IR OFF SMART IR ON

Saturation phenomenon of close-range Object is eliminated by applying the AutoManual Control that adjust the PWM pulse depending on the degree in which
he screen is saturated.

HLC

HLC ON HLC OFF

SAMBO'S unique Adaptive luminance Control AE will darken selected highlights and brighten dark portions,in the picture, the number on the car plate can seen clearly

D-WDR

D-WDR OFF D-WDR ON

SAMBO'S unique technology,Advanced Fast histogram equalizer/ Adaptive LUT / Local Contrast enhancement,
allows dark portions of a bright image to be shown clear,
enhancing details in the D-WDR image and removing noise.

DEFOG

DEFOG OFF DEFOG ON

Images in the extraordinary environment such as fog or rain or in a very strong Luminous intensity have DR (dynamic range),
Lower than ordinary images. NVP2400 has a contrast-based defog function,which is used to overcome such shortcoming

HIGH RESOLUTION

CONVENTIONAL 750TVL

TV Lines indicate the maximum number of identifiable changes that can be produced along a single scan line from an analog TV. SAMBO's analog surveillance cameras display a resolution that is more than 750TV Lines.

Effio-A Models

TYPE	MODEL	IMAGE	IR	LENS	D&N	OSD	SPECIALTY & OPTION
IR BULLET CAMERA	SCI124AHR		24 EA	3.6 / 4 mm	DDN	OSD Controller	Heater type IP66
	SSI124AHR		24 EA	3.6 / 4 mm	DDN	OSD Controller	IP66
	SCI134AHV1EF2812		34 EA	2.8~12 mm	TDN	External OSD	Heater type IP66
	SCI154AHV1EF0650		54 EA	2.8~12/6~50mm	TDN	External OSD	Heater type IP66
	SCI172AHV1EF0650		72 EA	6~50 mm			
	SNI130AHF		30 EA	3.6 mm	DDN	Internal OSD	Heater type IP66
	SNI120AHV1F		20 EA	2.8~12 mm	TDN		
	SNI140AHV1F		40 / 50 EA	2.8~12 / 6~22 / 3.6mm	TDN	Internal OSD	Heater type IP66
	SNI1303AHV1F		30 + 3 EA	6~50 mm			
	SSI140AHV1EF		40 EA	2.8~12/6~22 mm	TDN	Built-in OSD Key	Heater type IP66
	SSI1303AHV1EF		30 + 3 EA	6~50 mm			
DOME CAMERA	SVD10SCI120AHV1F		20/30 EA	2.8~12/6~22mm	TDN	Built-in OSD Key	IP66
	SVD10SCM120AHVF		—	2.8~12/6~22mm	DDN	Built-in OSD Key	IP66
	SVD07SCI124AHR		24 EA	3.6 / 4mm	DDN	OSD Controller	IP66
	VD05SCI110AHR		10 EA	3.6 mm	DDN	OSD Controller	IP66
	VD05SCM100AHR		—	3.6 mm			
	VDF05SCI110AHR		10 EA	3.6 mm	DDN	OSD Controller	IP66
	VDF05SCM100AHR		—	3.6 mm			
	SD10SCI120AHV1F		20 EA	2.8~12/6~22mm	TDN	Built-in OSD Key	
	SD10SCM100AHVF		—	2.8~12/6~22mm	DDN		
	SD10SCI125AHF		25 EA	3.6 mm	DDN	Built-in OSD Key	
	SD10SCM100AHF		—	3.6 mm			
	D07SCI112AHR		12 EA	3.6 mm	DDN	OSD Controller	
	D07SCM100AHR		—	3.6 mm			
	CD10SCI124AHV1F		24 EA	2.8~12/6~22mm	TDN	Built-in OSD Key	
	CD10SCM100AHVF		—	2.8~12/6~22mm	DDN		
BOX CAMERA	SCC152AH		—	—	DDN	Built-in OSD Key	Dual Voltage Mechanical TDN
	SCC152AH-T		—	—			
MINIATURE CAMERA	SDS130AHF		—	3.6 mm 3.7(pin hole) 2.8~12mm	DDN	Built-in OSD Key	30X30 mm
	SDS140AH					—	25X25 mm
BULLET CAMERA	SCB119AHR		—	3.6 mm	DDN	OSD Controller	
	SCB126AHMVR			4~9 / 3.5~16 /9~22 mm			IP66
SUNSHIELD CAMERA	SCB128AHR		—	3.6 mm	DDN	OSD Controller	IP66

E.Effio - E High Performance 700TVL Camera

KEY FEATURES

1/3" SONY 960H SUPER HAD II / EXVIEW II CCD
HIGH RESOLUTION 700TVL
2D-DNR / ATR / HLC
Motion Detection / Privacy Masking
Multi Language OSD, Built-in OSD key
(Internal adjustment)
Digital Effect (Mirror)
2.8~12 mm Varifocal Lens, ICR, DC IRIS
30 IR LEDs (IR VALID : 28m)
Dimension(mm) : Φ100
Power Source : DC12V (6.5V ~ 28V)
Option: Coaxial communication

SVD10SCI130EHV1F

DIMENSION

unit :mm

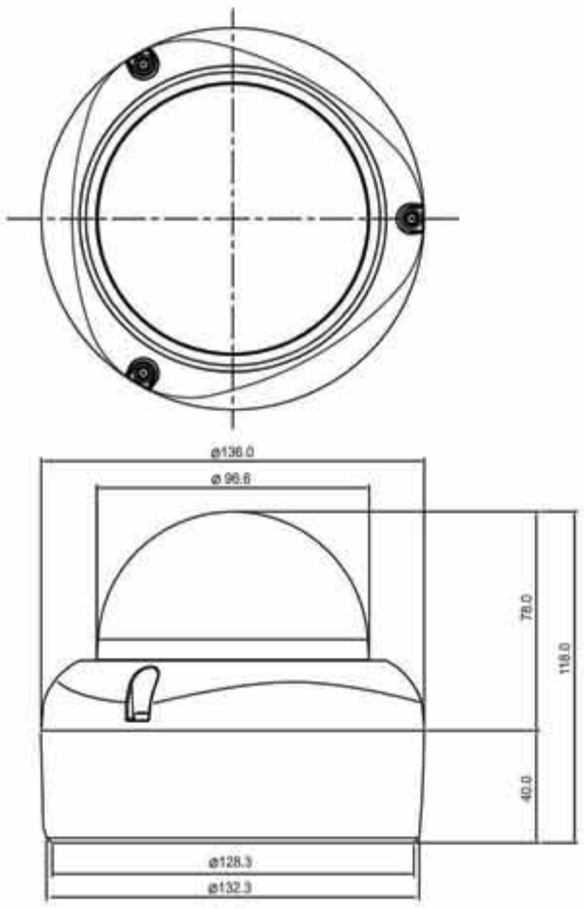

SPECIFICATION

Signal System		NTSC	PAL
Image Sensor		1/3" SONY SUPER HAD II CCD (960H)	
Total Pixels / Effective Pixels		1020(H) x 508(V)	1020(H) x 596(V)
Processor		ENHANCED EFFIO-E	
Sync. Type		Internal	
Scanning Frequency (Horizontal)		15.735KHz	15.625KHz
Scanning Frequency (Vertical)		59.94Hz	50Hz
Horizontal Resolution		700TVL	
S/N Ratio		Less than 50dB	
Video Output		CVBS 1.0Vp-p (75ohm)	
Min. Illumination		0 005 LUX	
Lens		2.8~12mm VARIFOCAL LENS (F1.4)	
IR LEDs		30 IR LEDs (IR RANGE 28mm)	
OSD		INTERNALLY BUILT-IN ADJUSTABLE OSD KEY	
OSD FUNCTIONS	White Balance	ATW(1800°K~10,500°K / Push / User1 / User2 / Anti CR / Manual / Push-Lock	
	Exposure	ELC / ALC	
	High Speed Shutter	Auto / Manual (1/60~1/10,000sec)	Auto / Manual (1/50~1/10 000sec)
	Backlight Compensation	ATR / BLC / HLC	
	Privacy Masking	8 Zone	
	Day & Night	Auto / Color / BW / EXT1 / EXT2	
	Motion Detection	Off / On	
	2D-DNR	Off / On (Adjustable)	
	Digital Effect	Off / Mirror	
	Sharpness	Adjustable	
OSD Language		English / French / German / Japanese / Portuguese / Russian / Spanish	
Operation Temp. & Storage Temp.		-10℃~50℃ / -20 ℃~60℃	
Communication		Coaxial commumication (UTC)	
Dimension (mm)		Φ100 X 118 (mm)	
Power Supply		DC12V (DC6.5V ~ 28V)	

EFFIO-E COMPARISON IMAGE

ATR

ATR OFF

ATR ON

Make balance between dark and light area on the screen especially, a place where are any windows.

2D - DNR

2D-DNR OFF

2D-DNR ON

SAMBO'S unique2 D Adaptive Noise Reduction Filter effectively removes the noise from the image signal,providing a more vivid and clear image.When using the AGC in low-lightings. clear image can be obtained by reducing Noise, and even in darker areas, brighter images can be obtained by using higher AGC

HLC

HLC OFF

HLC ON

SAMBO'S unique Adaptive luminance Control AE will darken selected highlights and brighten dark portions,in the picture, the number on the car plate can seen clearly

DAY&NIGHT

DAY

NIGHT

with the implementation of day& night function using the IR ut Filter method,removed wavelengths in the infrared ray area, optimal monitoring is possible for both day & night

MOTION DETECTION

"Motion detection" sign is appeared on the screen as soon as there is any movement. People who observe the monitor can realize whether there is some movement or not through this function even they do not concentrate on the screen all the time

HIGH RESOLUTION

CONVENTIONAL

700TVL

TV Lines indicate the maximum number of identifiable changes that can be produced along a single scan line from an analog TV. SAMBO's analog surveillance cameras display a resolution that is more than 700TV Lines.

Effio-E Models

TYPE	MODEL	IMAGE	IR	LENS	D&N	OSD	SPECIALTY & OPTION
IR BULLET CAMERA	SCI124EH		24 EA	3.6 / 4 mm	DDN		Heater type IP66
	SSI124EH		24 EA	3.6 / 4 mm	DDN		
	SCI134EHV1EF		34 EA	2.8~12 mm	TDN	External OSD	Heater type IP66
	SCI154EHV1EF		54 EA	2.8~12/6~50mm	TDN	External OSD	Heater type IP66
	SCI172EHV1EF		72 EA	6~50 mm			
	SNI130EHF		30 EA	3.6 mm	DDN	Internal OSD	Heater type IP66
	SNI120EHV1F		20 EA	2.8~12 mm	TDN		
	SNI140EHV1F		40 / 50 EA	2.8~12 / 6~22 / 3.6mm	TDN	Internal OSD	Heater type IP66
	SNI1303EHV1F		30 + 3 EA	6~50 mm			
	SSI140EHV1EF		40 EA	2.8~12/6~22 mm	TDN	External OSD	Heater type IP66
	SSI1303EHV1EF		30 + 3 EA	6~50 mm			
DOME CAMERA	SVD10SCI120EHV1F		20/30 EA	2.8~12/6~22 mm	TDN	Built-in OSD Key	IP66
	SVD10SCM120EHVF		—	2.8~12/6~22 mm	DDN	Built-in OSD Key	IP66
	SVD07SCI124EH		24 EA	3.6 / 4mm	DDN		IP66
	VD05SCI110EH		10 EA	3.6 mm	DDN		IP66
	VD05SCM100EH		—	3.6 mm			
	VDF05SCI110EH		10 EA	3.6 mm	DDN		IP66
	VDF05SCM100EH		—	3.6 mm			
	SD10SCI120EHV1F		20 EA	2.8~12/6~22 mm	TDN	Built-in OSD Key	
	SD10SCM100EHVF		—	2.8~12/6~22 mm	DDN		
	SD10SCI125EHF		25 EA	3.6 mm	DDN	Built-in OSD Key	
	SD10SCM100EHF		—	3.6 mm			
	D07SCI112EH		12 EA	3.6 mm	DDN		
	D07SCM100EH		—	3.6 mm			
	CD10SCI124EHV1F		24 EA	2.8~12/6~22 mm	TDN	Built-in OSD Key	
	CD10SCM110EHVF		—	2.8~12/6~22 mm	DDN		
BOX CAMERA	SCC152EH		—	—	DDN	Built-in OSD Key	Dual Voltage Mechanical TDN
	SCC152EH-T		—	—			
MINIATURE CAMERA	SDS130EHF		—	3.6 mm 3.7(pin hole) 2.8~12mm(DC IRIS)	DDN	Built-in OSD Key	25X25 mm
	SDS140EH						30X30 mm
BULLET CAMERA	SCB119EH		—	3.6 mm 3.7(pin hole) 2.8~12mm(DC IRIS)	DDN		—
	SCB126EHMV			4~9 / 3.5~16 /9~22 mm			IP66
SUNSHIELD CAMERA	SCB128EH		—	3.6 mm	DDN		IP66

PELICAN High Performance 700TVL Camera

KEY FEATURES

1/3" NEPIS 960H IT SENSOR
HIGH RESOLUTION 700TVL
24 IR LEDs (IR RANGE : 20m)
Multi Language OSD, OSD Controller(Option)
3D-DNR / D.WDR / HLC / DPC
Dead Pixel Correction(White & Black)
Motion Detection / Privacy Masking (8 Zones)
Dimension(mm) : Φ(70+98) X 84 (mm)
Power Source : DC12V (6.5V ~ 28V)
Option: Coaxial communication (UTC)

SVD07SCI624PHDR

DIMENSION

unit :mm

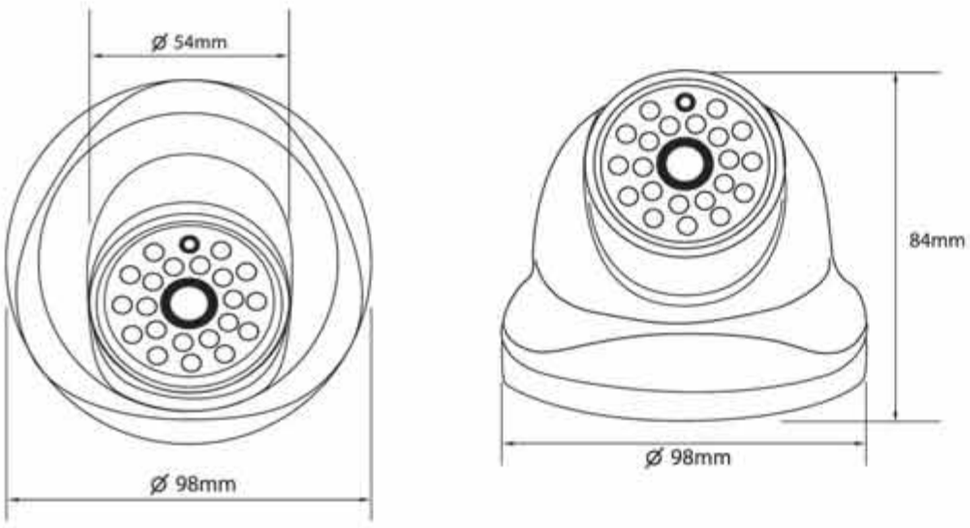

SPECIFICATION

Signal System		NTSC	PAL
Image Sensor		1/3" SONY SUPER HAD II CCD (960H)	
Total Pixels / Effective Pixels		1020(H) x 508(V)	1020(H) x 596(V)
Processor		Nepis 2080 / 2180	
Sync. Type		Internal	
Scanning Frequency (Horizontal)		15.735KHz	15.625KHz
Scanning Frequency (Vertical)		59.94Hz	50Hz
Horizontal Resolution		700TVL	
S/N Ratio		Less than 50dB	
Video Output		CVBS 1.0Vp-p (75ohm)	
Min. Illumination		0.005 LUX	
Lens		3.6MM FIXED LENS(F2.0)-Option 2.97mm, 4mm, 6mm	
IR LEDs (SAMRT IR)		24 IR LEDs (IR RANGE : 20m)	
DNR		3D + 2D DNR	
OSD		Optional OSD controller	
OSD FUNCTIONS	White Balance	ATW(1800 K~10 500 K) / Push/User1/User2/Anti CR/Manual/Push-Lock	
	Exposure	ELC / ALC	
	Shutter Speed	Auto / Manual (1/60~1/10,000sec)	Auto / Manual (1/50~1/10 000sec)
	Backlight Compensation	ATR / BLC / HLC	
	Privacy&Motion Detection	8 Zone	
	Day & Night	Auto / Color / BW / EXT1 / EXT2	
	Digital Effect	MIRROR	
OSD Language		ENG / CHN / JPN / SPA / RUS / GER / POR / FRA	
Operation Temp. & Storage Temp.		-10℃~50℃ / -20 ℃~60℃	
Power Supply		DC12V (DC6.5V ~ 28V)	
Dimension (mm)		Φ(70+98) X 84mm	
Communication		Option Coaxial communication (UTC)	

PELICAN COMPARISON IMAGE

3D - DNR

3D-DNR OFF　3D-DNR ON

SAMBO'S unique 3D Adaptive Noise Reduction Filter effectively removes the Noise from the image signal,providing a more vivid and clear image.When using the AGC in low-lightings. clear image can be obtained by reducing Noise, and even in darker areas, brighter images can be obtained by using higher AGC

DPC

DEAD PIXEL　DEAD PIXEL CORRECTION

Dynamic dead pixel is found over time after using sensors for a certain period of time. It may not be visible on the screen of ordinary illumination.However, the dead pixel can be made visible by amplifying the analog / digital again. SAMBO's Camera can correct the defects that can occur at the low light conditions automatically

LSC

LSC OFF　LSC ON

It can compensate the shading correction curve on each

SMART D-ZOOM

Provides zoom in picture

MOTION DETECTION

"Motion detection" sign is appeared on the screen as soon as there is any movement.
People who observe the monitor can realize whether there is some movement or not through this function even they do not concentrate on the screen all the time

HIGH RESOLUTION

CONVENTIONAL　700TVL

TV Lines indicate the maximum number of identifiable changes that can be produced along a single scan line from an analog TV. SAMBO's analog surveillance cameras display a resolution that is more than 700TV Lines.

PELICAN Models

TYPE	MODEL	IMAGE	IR	LENS	D&N	OSD	SPECIALTY & OPTION
IR BULLET CAMERA	SCI624PHR		24 EA	3.6 / 4 mm	DDN	OSD Controller	Heater type IP66
	SSI624PH		24 EA	3.6 / 4 mm	DDN	—	
	SSI624PHR					OSD Controller	
	SCI634PHV1EF		34 EA	2.8~12 mm	TDN	External OSD	Heater type IP66
	SCI654PHV1EF		54 EA	2.8~12/6~50mm	TDN	External OSD	Heater type IP66
	SCI672PHV1EF		72 EA	6~50 mm			
	SNI630PHF		30 EA	3.6 mm	DDN	Internal OSD	Heater type IP66
	SNI620PHV1F		20 EA	2.8~12 mm	TDN		
	SNI640PHV1F		40 / 50 EA	2.8~12 / 6~22 / 3.6mm	TDN	Internal OSD	Heater type IP66
	SNI6303PHV1F		30 + 3 EA	6~50 mm			
	SSI640PHDV1EF		40 EA	2.8~12/6~22mm	TDN	Built-in OSD Key	3D - DNR
	SSI640PHV1EF						—
	SSI6303PHDV1EF		30 + 3 EA	6~50 mm			3D - DNR
DOME CAMERA	SVD10SCI620PHV1F		20/30 EA	2.8~12/6~22mm	TDN	Built-in OSD Key	IP66
	SVD10SCM620PHVF		—	2.8~12/6~22mm	DDN	Built-in OSD Key	IP66
	SVD07SCI624PHR		24 EA	3.6 / 4mm	DDN	OSD Controller	IP66
	VD05SCI610PHR		10 EA	3.6 mm	DDN	OSD Controller	IP66
	VD05SCM600PHR		—	3.6 mm			
	VDF05SCI610PHR		10 EA	3.6 mm	DDN	OSD Controller	IP66
	VDF05SCM600PHR		—	3.6 mm			
	SD10SCI620PHV1F		20 EA	2.8~12/6~22mm	TDN	Built-in OSD Key	
	SD10SCM600PHF		—	2.8~12/6~22mm	DDN		
	SD10SCI625PHF		25 EA	3.6 mm	DDN	Built-in OSD Key	
	SD10SCM600PHF		—	3.6 mm			
	D07SCI612PHR		12 EA	3.6 mm	DDN	OSD Controller	
	D07SCM600PHR		—	3.6 mm			
	CD10SCI624PHV1F		24 EA	2.8~12/6~22mm	TDN	Built-in OSD Key	
	CD10SCM600PHVF		—	2.8~12/6~22mm	DDN		
BOX CAMERA	SCC652PH		—	—	DDN	Built-in OSD Key	Dual Voltage Mechanical TDN
MINIATURE CAMERA	SDS600PHF		—	3.6 mm 3.7(pin hole) 2.8~12mm	DDN	Built-in OSD Key	
	SDS630PH					—	
BULLET CAMERA	SCB619PHR		—	3.6 mm	DDN	OSD Controller	IP66
	SCB626PHMVR			4~9 / 3.5~16 /9~22 mm			
SUNSHIELD CAMERA	SCB628PHR		—	3.6 mm	DDN	OSD Controller	IP66

ZOOM CAMERA High Performance Zoom Camera

SLZ418

HIGH RESOLUTION 700 TV LINE
WDR / 3D,2D-DNR
ENHANCED AUTO FOCUSING &
SMART LENS CONTROL
18 X OPTICAL ZOOM
16 X E-ZOOM
ON SCREEN DISPLAY
MOTION DETECTION
PRIVACY ZONE MASKING

SLZ427

HIGH RESOLUTION 700 TV LINE
WDR / 3D,2D-DNR
ENHANCED AUTO FOCUSING &
SMART LENS CONTROL
27 X OPTICAL ZOOM
16 X E-ZOOM
ON SCREEN DISPLAY
MOTION DETECTION
PRIVACY ZONE MASKING

SLZ363

1/4" 613K pixels Sony Super HAD II
(Double scan)CCD
36x Optical Zoom,Digital 32 x ZOOM
Super High Resolution 650 TV lines
D&N,WDR,DNR support

SLZ223

1/4" 613K pixels Sony Super HAD II
(Double scan)CCD
22X Optical Zoom,Digital 32 x ZOOM
Super High Resolution 650 TV lines
D&N,WDR,DNR support

SLZ123

1/4" 613K pixels Sony Super HAD II
(Double scan)CCD
12x Optical Zoom,Digital 32 x ZOOM
Super High Resolution 650 TV lines
D&N,WDR,DNR support

SZM223

1/4" 613K pixels Sony Super HAD II
(Double scan)CCD
22x Optical Zoom,Digital 32 x ZOOM
Super High Resolution 650 TV lines
D&N,WDR,DNR support

SZM363

1/4" 613K pixels Sony Super HAD II
(Double scan)CCD
36x Optical Zoom,Digital 32 x ZOOM
Super High Resolution 650 TV lines
D&N,WDR,DNR support

SZM123

1/4" 613K pixels Sony Super HAD II
(Double scan)CCD
12x Optical Zoom,Digital 32 x ZOOM
Super High Resolution 650 TV lines
D&N,WDR,DNR support

PTZ / DVR,NVR / IP CAMERA High Performance Camera

SPH737SE

PTZ CAMERA (PAN/TILT/ZOOM)

37x Optical/Total 444x Zoom
610K/570K, 1/4" SONY Dual scan CCD
Resolution: 650TVL(Color), 750TVL(B/W)
Min. illumination 0.00001Lux (DSS)
Day & Night (ICR),DIS
Protection for Low Voltage
Variety of surveillance
Auto Bad Pixel Correction
Weather-proof(IP66),Fan / Heater

SIP 5300 / 5320

IP BOX CAMERA

1.3M / 2M CMOS Progressive Scan Image Sensor
1280 x 1024 / 1920 x 1080
1~30 fps@1280x720, 1~22.5 fps@1280x960 /
1~30 fps@1920x1080
SD card Backup
Live monitoring, Recording, Search & Play-back
PoE(Power Over Ethernet)

SIP5500IR / SIP5500

IP VANDAL DOME CAMERA

1/3" SONY SUPER HAD CCD
with 410K PIXELS
DUAL STREAMING (h.264,H264 / MJPEG)
FULL D1 RESOLUTION : at 30fps / 25fps
28 IR LEDS
ETHERNET 10/100 BASE - T (PoE)

SND16SH / 08SH / 04SH

NVR (NETWORKING VIDEO RECORDER)

Support multi-format video recording of MJPEG/MPEG-4/H.264
Schedule, Motion, Event-driven Forced recordings
Recording Frame Rate-
MAX 6HD / 8HD / 10HD / 12HD AT FULL /
30FPS /15FPS / 7.5FPS
Instant Playbaack
Dynamic user authentication
Powerful search function
Support up to 4 Tbytes of recording space on 2HDD
Multi-vendor support such as Axis, Arecont and etc.
PTZ support for cameras

SSD16EH / SSD8EH

STAND ALONE DVR

H.264 COMPRESSION
AVAILABLE IN 4/8/16 CH
PENTAPLEX
AUTO DDNS / UPNP
SMART PHONE VIEWER

MODULE High Quality Module (ODM AVAILBLE)

CCD CAMERA MODULE

P3 Raptor MODULE

1/3" SONY 960H SUPER HAD II / EXVIEW II CCD
HIGH RESOLUTION 700TVL
3D-DNR / WDR / HSBLC
Sens-up (~x512) / Motion Detection /
Privacy Masking
Multi Language OSD,
Built-in OSD key (internal adjusment)-OPTION
Digital Effect (Mirror,Digital Zoom x 16,Rotate,V-flop)
Fixed Lens,Vari-focal Lens,ICR,DC IRIS
POWER : DC12V (6.5V ~ 28V)

E.Effio-V,A,E MODULE

1/3" SONY 960H SUPER HAD II / EXVIEW II CCD
HIGH RESOLUTION 800TVL / 750 TVL / 700TVL
WDR / D.WDR /2D+3D DNR / 2D DNR / HLC
Motion Detection /Privacy Masking
Multi Language OSD,
Built-in OSD key OPTION
Digital Effect (Mirror) / DEFOG / DIS / EZOOM
Fixed Lens,Vari-focal Lens,ICR,DC IRIS
POWER : DC12V (6.5V ~ 28V)

HD-SDI MODULE

1/3" 2.1 MP Panosonic CMOS
FULL HD Resolution : 1100TVL
1920 x 1080 pixel / 30fps, 1280 x 720 pixel / 60fps
Motion Detection / Privacy Masking
Video Out : HD-SDI & Analogue (CVBS)
3D-DNR / SMART DNR / D-WDR / DEFOG / D.ZOOM
Fixed Lens,Vari-focal Lens,ICR,DC IRIS
POWER : DC12V (6.5V ~ 28V)

PELICAN MODULE

1/3" NEPIS 960H IT SENSOR
HIGH RESOLUTION 700TVL
D-WDR / HLC / 3D-DNR / 2D-DNR
Motion Detection(48X15) /
Privacy Masking (8 Zones)
Multi Language OSD,
OSD Controller(Option)
Dead Pixel Correction(White & Black)
SAMRT IR
Fixed Lens,Vari-focal Lens,ICR,DC IRIS
POWER : DC12V (6.5V ~ 28V)

TFT LCD MODULE

3.5"/4" TFT LCD MONITOR MODULE
320 x RGB x 240
NTSC / PAL (AUTO)
DC12V(6.5V~28V)
(120mA / 150mA MAX)
OSD FUNCTION

COLOR TFT LCD,LED BACK LIGHT TYPE MODULE
SIZE 3.5",4",4.3".5.6"7",8"
HIGH RESOLUTION:
FROM 320 X RGB X 240 TO 800 X RGB X 240
DC 5V~32V
LOW POWER CONSUMPTION
REMOTE CONTROL OSD

CAR REARVIEW CAMERA High Qualiry Car rearview Camera & monitor

SCR100EH

1/3" COLOR SONY CCD
420 / 560 /620 /TV LINE
NUMBER PLATE TYPE
WATER PROOF

SCR503L

1/3" COLOR SONY SUPER CCD
420 / 560 /620 /TV LINE
3 IRLEDS 0.1 LUX(F:1.2)
AWB.AGC

SCR540 / 580 / 550

1/3" COLOR SONY SUPER CCD
420 / 560 /620 /TV LINE
WATER PROOF

4.3" SAMSUNG
WIDE MONITOR
Res.480xRGBx272
500 cd. NTSC / PAL

TOYOTA

VD04SCM500
VD04SCI510

1/4" COLOR SONY CCD
420 / 560 /620 /TV LINE
VANDAL PROOF
WITH IR
WITYOUT IR
COMPACT SIZE
WATER PROOF

SCR118

1/4" COLOR SONY CCD
420 / 560 /620 /TV LINE
COMPACT SIZE
WATER PROOF

SCR119

1/3" COLOR SONY CCD
420 / 560 /620 /TV LINE
INSTALLATION
BULLET TYPE
WATER PROOF

SCRM700DW

7" COLOR TFT LCD MONITOR
DIGITAL / ANALOG TYPE
2 VIDEO-IN
HEADREST & STAND

SCRM104DW

10.4" COLOR TFT LCD MONITOR
DIGITAL TYPE
4SCREEN MODES
(FUL, WIDE,CINEMA,NORMAL)
STAND TYPE

SINCE 1991
SAMBO
SAMBO HITECH CO.,LTD.

SAMBO HITECH CO., LTD.
616-15, Gansuk4-Dong, Namdong-Gu, Incheon 405-810, Korea
TEL. 82-32-863-3300 FAX. 82-32-863-3345
E-mail. sambo@sbcctv.co.kr
http://www.sbcctv.co.kr