TRUEN

TRUEN DATASHEET

IP CAMERA

1. TCAM-4322MBR 3
2. TCAM-4732MBR 5
3. TCAM-6522MIR 7
4. TN-B3204U6R 9
5. TN-B3218K6R 11
6. TN-D32046R-C 13
7. TX-P5N236N20R 15
8. TX-P6236N20 17

TRUEN

TCAM-4322MBR

- Sony 1/2.8” CMOS
- H.265 / H.264 / MJPEG
- Max 30FPS @ 1920 x 1080
- Built-in X4 Motorized Lens
- X10 Digital Zoom
- SRT (Secure Reliable Transport)
- RTSP/RTMP/MPEG-TS
- ONVIF (Profile S, Profile G)
- True WDR
- Hybrid CBR
- Dual Power (DC/PoE)

www.truen.co.kr
os@truen.co.kr

ONVIF SRT READY SRTALLIANCE SECURE RELIABLE TRANSPORT

TCAM-4322MBR Specifications

Basic Specifications	
Image Sensor	1/2.8” Sony CMOS Sensor
Lens type	Auto DC Iris, Zoom lens, IR cut filter
Lens mount	Board mount
Minimum illumination	0 Lux (IR LED on), Color : 0.04 Lux (1/30, 50IRE)
Lens (wide to tele)	4x optical zoom ; f = 2.7mm ~ 10.8mm
Shutter Speed	1/1 to 1/100000
Maximum Aperture Ratio	F1.4
Angle of View	Horizontal : 105.6°(wide) ~ 37.37°(tele), Vertical : 62.6°(wide) ~ 21.2°(tele)
Privacy masking	4 regions
Flip mode	Horizontal, Vertical
Image enhancement	AWB, AE, NR, TDN, DSS, BLC, GAMMA, DPC, DEFOG, WDR
IR LED	850mm, 4pcs, 30m

Video	
Compression	H.265/H.264/MJPEG
Frame rate	Max 30fps @ 1920x1080
Bitrate	Primary : 32Kbps ~ 16Mbps, Secondary x3 : 32Kbps ~ 4Mbps
Resolution	320x240 ~ 1920x1080
Streaming	Primary : H.265/H.264, Secondary x 2 : H.265/H.264/MJPEG
Burn-in OSD	Multi-lingual

Audio	
Compression	G.711
Sampling rate	G.711 : 8 KHz
Bitrate	G.711 : 64Kbps
Streaming	Full-duplex
Input/Output	1 x Line-In (mono, RCA type), 1 x Line-Out (mono, RCA type)

Network	
Protocol	IPv4/v6, TCP, UDP, IGMP(Multicast), ICMP, DHCP, HTTP, HTTP, FTP, SNMP, SMTP, UPnP, WS-Discovery, Zero Configuration, NTP, SRT, MPEG-TS, RTP, RTSP, RTMP, DDNS
Security	Password protection, IP address filtering, HTTPS encryption
API	Truen protocol/SDK, ONVIF, PSIA, MPEG-TS
Interface	Ethernet 10/100 base-T (RJ-45)

Event / Alarm	
Event sources	Motion, Sensor input, Client disconnection, Intrusion, Line crossing, Tampering, Face detection, Sound detection, User defined event
Event actions	Notification(E-mail), FTP, PTZ preset, Alarm control, Recording
External devices	1 x Sensor-In (dry contact, NO/NC) 1 x Alarm-Out (dry contact, NO) 1 x RS-485 port : PTZ control etc.

General	
Power Supply	Min DC12V/1.5A, PoE(Power over Ethernet) : 802.3af
Power Consumption	DC12V/PoE : Max 12W
Operating Temperature	-10°C ~ 50°C (14°F ~ 122°F)
Storage Temperature	-10°C ~ 50°C (14°F ~ 122°F)
Operating Humidity	20% ~ 80% RH
Storage Humidity	20% ~ 80% RH
Edge Storage	Micro SD/SDHC/SDXC slot (Max 256GB)
Dimensions (W x H x D)	Ø85.7 x 297.9(L) [mm]
Weight	1,570g

DIMENSION

(mm)

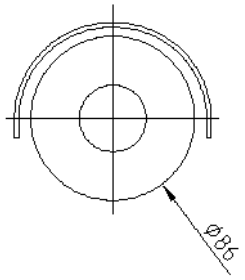

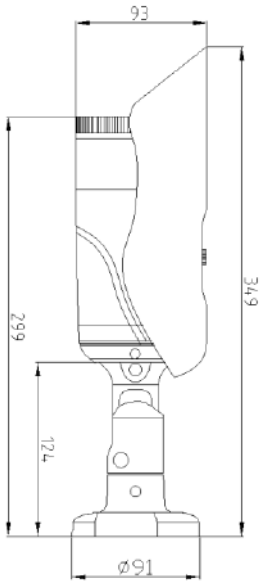

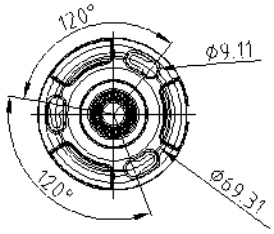

© Truen Co., Ltd. All rights reserved. Reproduction in whole or in part without written permission is prohibited. Features and specifications are subject to change without notice. The values for mass and dimensions are approximate. Please contact for specific models available in your region.

TRUEN

TCAM-4732MBR

- Sony 1/2.8” CMOS
- H.265 / H.264 / MJPEG
- Max 30FPS @ 1920 x 1080
- Built-in X20 Motorized Lens
- X10 Digital Zoom
- SRT (Secure Reliable Transport)
- RTSP/RTMP/MPEG-TS
- ONVIF (Profile S, Profile G)
- True WDR
- Hybrid CBR
- Dual Power (DC/PoE)

www.truen.co.kr
os@truen.co.kr

ONVIF SRT READY SRTALLIANCE SECURE RELIABLE TRANSPORT

TCAM-4732MBR Specifications

Basic Specifications	
Image Sensor	1/2.8” Sony CMOS Sensor
Lens type	Auto DC Iris, Zoom lens, IR cut filter
Lens mount	Board mount
Minimum illumination	0 Lux (IR LED on), Color : 0.02 Lux (1/30, 50IRE)
Lens (wide to tele)	20x optical zoom ; f = 5.0 ~ 100mm
Shutter Speed	1/1 to 1/100000
Maximum Aperture Ratio	F1.5 ~ F.3.2
Angle of View	Horizontal : 58.5°(wide) ~ 3.1°(tele), Vertical : 33°(wide) ~ 1.8°(tele)
Privacy masking	4 regions
Flip mode	Horizontal, Vertical
Image enhancement	AWB, AE, NR, TDN, DSS, BLC, GAMMA, DPC, DEFOG, WDR
IR LED	850mm, 8pcs, 50m

Video	
Compression	H.265/H.264/MJPEG
Frame rate	Max 30fps @ 1920x1080
Bitrate	Primary : 32Kbps ~ 16Mbps, Secondary x3 : 32Kbps ~ 4Mbps
Resolution	320x240 ~ 1920x1080
Streaming	Primary : H.265/H.264, Secondary x 2 : H.265/H.264/MJPEG
Burn-in OSD	Multi-lingual

Audio	
Compression	G.711
Sampling rate	G.711 : 8 KHz
Bitrate	G.711 : 64Kbps
Streaming	Full-duplex
Input/Output	1 x Line-In (mono, RCA type), 1 x Line-Out (mono, RCA type)

Network	
Protocol	IPv4/v6, TCP, UDP, IGMP(Multicast), ICMP, DHCP, HTTP, HTTP, FTP, SNMP, SMTP, UPnP, WS-Discovery, Zero Configuration, NTP, SRT, MPEG-TS, RTP, RTSP, RTMP, DDNS
Security	Password protection, IP address filtering, HTTPS encryption
API	Truen protocol/SDK, ONVIF, PSIA, MPEG-TS
Interface	Ethernet 10/100 base-T (RJ-45)

Event / Alarm	
Event sources	Motion, Sensor input, Client disconnection, Intrusion, Line crossing, Tampering, Face detection, Sound detection, User defined event
Event actions	Notification(E-mail), FTP, PTZ preset, Alarm control, Recording
External devices	1 x Sensor-In (dry contact, NO/NC) 1 x Alarm-Out (dry contact, NO) 1 x RS-485 port : PTZ control etc.

General	
Power Supply	Min DC12V, PoE(Power over Ethernet) : 802.3af
Power Consumption	DC12V/PoE : Max 12W
Operating Temperature	-10°C ~ 50°C (14°F ~ 122°F)
Storage Temperature	-10°C ~ 50°C (14°F ~ 122°F)
Operating Humidity	20% ~ 80% RH
Storage Humidity	20% ~ 80% RH
Edge Storage	Micro SD/SDHC/SDXC slot (Max 512GB)
Dimensions (W x H x D)	Ø85.7 x 297.9(L) [mm]
Weight	1,630g

DIMENSION

(mm)

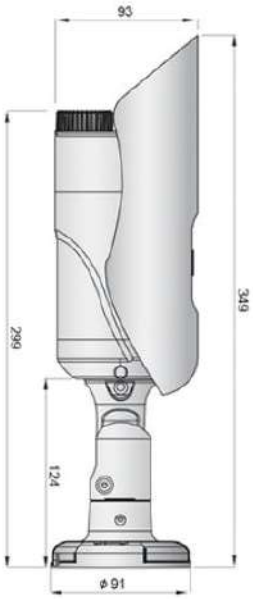

© Truen Co., Ltd. All rights reserved. Reproduction in whole or in part without written permission is prohibited. Features and specifications are subject to change without notice. The values for mass and dimensions are approximate. Please contact for specific models available in your region.

TRUEN

TCAM-6522MIR

- Sony 1/2.8” CMOS
- H.265 / H.264 / MJPEG
- Max 30FPS @ 1920 x 1080
- Built-in X4 Motorized Lens
- SRT (Secure Reliable Transport)
- RTSP/RTMP/MPEG-TS
- ONVIF (Profile S, Profile G)
- True WDR
- Hybrid CBR

www.truen.co.kr
os@truen.co.kr

TCAM-6522MIR Specifications

Basic Specifications	
Image Sensor	1/2.8” Sony CMOS Sensor
Lens type	Auto DC Iris, Zoom lens, IR cut filter
Lens mount	Board mount
Minimum illumination	0 Lux (IR LED on), Color : 0.04 Lux (1/30, 50IRE)
Lens (wide to tele)	4x optical zoom ; f = 2.7mm ~ 13.5mm
Shutter Speed	1/1 to 1/100000
Maximum Aperture Ratio	F1.4
Angle of View	Horizontal : 110°(wide) ~ 33°(tele)
Privacy masking	4 regions
Flip mode	Horizontal, Vertical
Image enhancement	AF, AWB, AE, NR, TDN, DSS, BLC, HSBLC, GAMMA, DPC, DEFOG, WDR
IR LED	850nm, 4pcs, min 30m

Video	
Compression	H.265/H.264/MJPEG
Frame rate	Max 30fps @ 1920x1080
Bitrate	Primary : 32Kbps ~ 16Mbps, Secondary : 32Kbps ~ 4Mbps
Resolution	320x240 ~ 1920x1080
Streaming	Primary : H.265/H.264, Secondary x 2: H.265/H.264/MJPEG
Burn-in OSD	Multi-lingual

Audio	
Compression	G.711
Sampling rate	G.711 : 8 KHz
Bitrate	G.711 : 64Kbps
Streaming	Full-duplex
Input/Output	1 x Line-In (mono, RCA type), 1 x Line-Out (mono, RCA type)

Network	
Protocol	IPv4/v6, TCP, UDP, IGMP(Multicast), ICMP, DHCP, HTTP, HTTP, FTP, SNMP, SMTP, UPnP, WS-Discovery, Zero Configuration, NTP, SRT, MPEG-TS, RTP, RTSP, RTMP, DDNS
Security	Password protection, IP address filtering, HTTPS encryption
API	Truen protocol/SDK, ONVIF, PSIA, MPEG-TS
Interface	Ethernet 10/100 base-T (RJ-45)

Event / Alarm	
Event sources	Motion, Sensor input, Client disconnection, Intrusion, Line crossing, Tampering, Face detection, Sound detection, User defined event
Event actions	Notification(E-mail), FTP, PTZ preset, Alarm control, Recording
External devices	1 x Sensor-In (dry contact, NO/NC) 1 x Alarm-Out (dry contact, NO) 1 x RS-485 port : PTZ control etc.

General	
Power Supply	Min DC12V/1.5A, PoE(Power over Ethernet) : 802.3af
Power Consumption	DC12V/PoE : Max 12W
Operating Temperature	-10°C ~ 50°C (14°F ~ 122°F)
Storage Temperature	-10°C ~ 50°C (14°F ~ 122°F)
Operating Humidity	20% ~ 80% RH
Storage Humidity	20% ~ 80% RH
Edge Storage	Micro SD/SDHC/SDXC slot (Max 256GB)
Dimensions (W x H x D)	Ø100 for vandal dome, Ø147 for bottom
Weight	980g

DIMENSION

(mm)

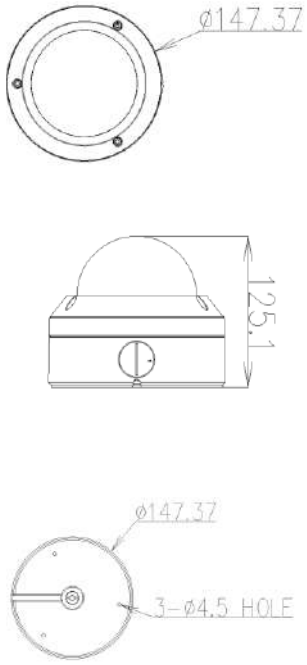

© Truen Co., Ltd. All rights reserved. Reproduction in whole or in part without written permission is prohibited. Features and specifications are subject to change without notice. The values for mass and dimensions are approximate. Please contact for specific models available in your region.

TRUEN

TN-B3204U6R

- Sony 1/2” CMOS
- H.265/H.264/MJPEG
- Max 60FPS @ 1920 x 1080
- Built-in X4 Motorized Lens
- X10 Digital Zoom
- SRT (Secure Reliable Transport)
- RTSP/RTMP/MPEG-TS
- ONVIF (Profile S, Profile G)
- True WDR
- Hybrid CBR

www.truen.co.kr
os@truen.co.kr

ONVIF SRT READY SRTALLIANCE SECURE RELIABLE TRANSPORT

TN-B3204U6R Specifications

Basic Specifications	
Image Sensor	1/2” Sony CMOS Sensor
Lens type	Auto DC Iris, Zoom lens, IR cut filter
Lens mount	Board mount
Minimum illumination	0 Lux (IR LED on), Color : 0.015 Lux (1/30, 50IRE)
Lens (wide to tele)	4x optical zoom ; f = 3.5 ~ 14.0mm
Shutter Speed	1/1 to 1/100000
Maximum Aperture Ratio	F1.53
Angle of View	Horizontal : 103.4°(wide) ~ 35.5°(tele) Vertical : 67°(wide) ~ 20.1°(tele)
Privacy masking	4 regions
Flip mode	Horizontal, Vertical
Image enhancement	AF, AWB, AE, NR, TDN, DSS, BLC, GAMMA, DPC, DEFOG, WDR
IR LED	850nm, 4pcs, 30m

Video	
Compression	H.265/H.264/MJPEG
Frame rate	Max 60fps @ 1920x1080
Bitrate	Primary : 32Kbps ~ 16Mbps, Secondary : 32Kbps ~ 4Mbps
Resolution	320x240 ~ 1920x1080
Streaming	Quad Streaming Primary : H.265/H.264, Secondary x 3 : H.265/H.264/MJPEG
Burn-in OSD	Multi-lingual

Audio	
Compression	G.711
Sampling rate	G.711 : 8 KHz
Bitrate	G.711 : 64Kbps
Streaming	Full-duplex
Input/Output	1 x Line-In (mono), 1 x Line-Out (mono)

Network	
Protocol	IPv4/v6, TCP, UDP, IGMP(Multicast), ICMP, DHCP, HTTP, HTTP, FTP, SNMP, SMTP, UPnP, WS-Discovery, Zero Configuration, NTP, SRT, MPEG-TS, RTP, RTSP, RTMP, DDNS
Security	Password protection, IP address filtering, HTTPS encryption
API	Truen protocol/SDK, ONVIF, PSIA, MPEG-TS
Interface	Ethernet 10/100/1000 base-T (RJ-45)

Event / Alarm	
Event sources	Motion, Sensor input, Client disconnection, Intrusion, Line crossing, Tampering, Face detection, Sound detection, User defined event
Event actions	Notification(E-mail), FTP, PTZ preset, Alarm control, Recording
External devices	1 x Sensor-In (dry contact, NO/NC) 1 x Alarm-Out (dry contact, NO) 1 x RS-485 port : PTZ control etc.

General	
Power Supply	Min DC12V/1.5A, PoE(Power over Ethernet) : 802.3af
Power Consumption	DC12V/PoE : Max 12W
Operating Temperature	-10°C ~ 50°C (14°F ~ 122°F)
Storage Temperature	-10°C ~ 50°C (14°F ~ 122°F)
Operating Humidity	20% ~ 80% RH
Storage Humidity	20% ~ 80% RH
Edge Storage	Micro SD/SDHC/SDXC slot (Max 512GB)
Dimensions (W x H x D)	Ø120.5 x 391.5(L) [mm]
Weight	1,320g

DIMENSION

(mm)

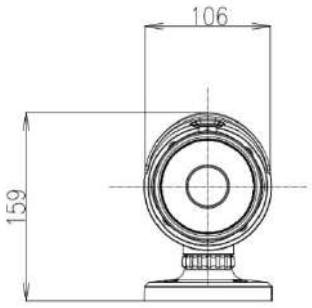

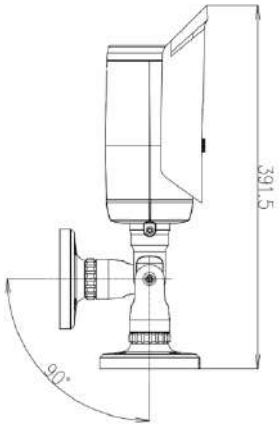

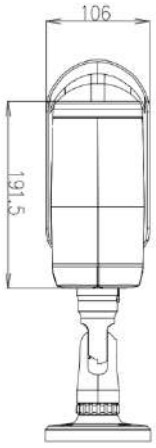

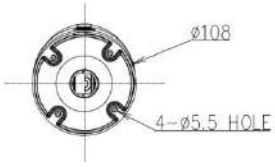

© Truen Co., Ltd. All rights reserved. Reproduction in whole or in part without written permission is prohibited. Features and specifications are subject to change without notice. The values for mass and dimensions are approximate. Please contact for specific models available in your region.

TRUEN

TN-B3218K6R

- Sony 1/2” CMOS
- H.265/H.264/MJPEG
- Max 60FPS @ 1920 x 1080
- Built-in X18 Motorized Lens
- X10 Digital Zoom
- SRT (Secure Reliable Transport)
- RTSP/RTMP/MPEG-TS
- ONVIF (Profile S, Profile G)
- True WDR
- Hybrid CBR

www.truen.co.kr
os@truen.co.kr

ONVIF SRT READY SRT ALLIANCE SECURE RELIABLE TRANSPORT

TN-B3218K6R Specifications

Basic Specifications	
Image Sensor	1/2” Sony CMOS Sensor
Lens type	Auto DC Iris, Zoom lens, IR cut filter
Lens mount	Board mount
Minimum illumination	0 Lux (IR LED on), Color : 0.015 Lux (1/30, 50IRE)
Lens (wide to tele)	18x optical zoom ; f = 6.8 ~ 120mm
Shutter Speed	1/1 to 1/100,000 sec
Maximum Aperture Ratio	F1.61 ~ 4.13
Angle of View	Horizontal : 55.5°(wide) ~ 3.56°(tele), Vertical : 33.1°(wide) ~ 2.14°(tele)
Privacy masking	4 regions
Flip mode	Horizontal, Vertical
Image enhancement	AF, AWB, AE, NR, TDN, DSS, BLC, GAMMA, DPC, DEFOG, WDR
IR LED	850nm, 8pcs, 70m
Video	
Compression	H.265/H.264/MJPEG
Frame rate	Max 60fps @ 1920x1080
Bitrate	Primary : 32Kbps ~ 16Mbps, Secondary : 32Kbps ~ 4Mbps
Resolution	320x240 ~ 1920x1080
Streaming	Quad Streaming Primary : H.265/H.264, Secondary x 3 : H.265/H.264/MJPEG
Burn-in OSD	Multi-lingual
Output	N/A
Audio	
Compression	G.711
Sampling rate	G.711 : 8 KHz
Bitrate	G.711 : 64Kbps
Streaming	Full-duplex
Input/Output	1 x Line-In (mono), 1 x Line-Out (mono)
Network	
Protocol	IPv4/v6, TCP, UDP, IGMP(Multicast), ICMP, DHCP, HTTP, HTTP, FTP, SNMP, SMTP, UPnP, WS-Discovery, Zero Configuration, NTP, SRT, MPEG-TS, RTP, RTSP, RTMP, DDNS
Security	Password protection, IP address filtering, HTTPS encryption
API	Truen protocol/SDK, ONVIF, PSIA, MPEG-TS
Interface	Ethernet 10/100/1000 base-T (RJ-45)
Event / Alarm	
Event sources	Motion, Sensor input, Client disconnection, Intrusion, Line crossing, Tampering, Face detection, Sound detection, User defined event
Event actions	Notification(E-mail), FTP, PTZ preset, Alarm control, Recording
External devices	1 x Sensor-In (dry contact, NO/NC) 1 x Alarm-Out (dry contact, NO) 1 x RS-485 port : PTZ control etc.
General	
Power Supply	Min DC12V/1.5A, PoE(Power over Ethernet) : 802.3af
Power Consumption	DC12V/PoE : Max 12W
Operating Temperature	-10°C ~ 50°C (14°F ~ 122°F)
Storage Temperature	-10°C ~ 50°C (14°F ~ 122°F)
Operating Humidity	20% ~ 80% RH
Storage Humidity	20% ~ 80% RH
Edge Storage	Micro SD/SDHC/SDXC slot (Max 512GB)
Dimensions (W x H x D)	Ø120.5 x 391.5(L) [mm]
Weight	1,610g

DIMENSION

(mm)

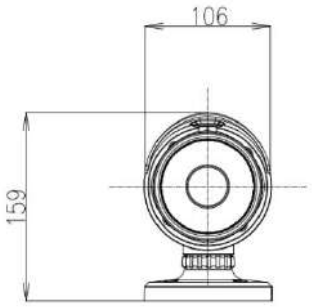

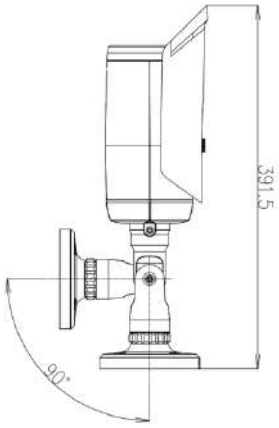

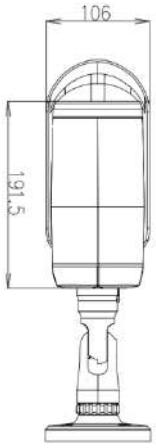

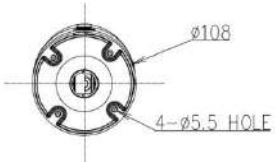

© Truen Co., Ltd. All rights reserved. Reproduction in whole or in part without written permission is prohibited. Features and specifications are subject to change without notice. The values for mass and dimensions are approximate. Please contact for specific models available in your region.

TRUEN

TN-D32046R-C

- Sony 1/2” CMOS
- H.265 / H.264 / MJPEG
- Max 60FPS @ 1920 x 1080
- X3 Optical Zoom
- SRT (Secure Reliable Transport)
- RTSP/RTMP/MPEG-TS
- ONVIF (Profile S, Profile G)
- True WDR
- Hybrid CBR
- Dual Power (DC, PoE)

www.truen.co.kr
os@truen.co.kr

TN-D32046R-C Specifications

Basic Specifications	
Image Sensor	1/2” Sony CMOS Sensor
Lens type	Auto DC Iris, Zoom lens, IR cut filter
Lens mount	Board mount
Minimum illumination	0 Lux (IR LED on)
Lens (wide to tele)	3x optical zoom ; f = 3.6mm ~ 11.8mm
Shutter Speed	1/1 ~ 1/100,000 sec
Maximum Aperture Ratio	F1.4
Angle of View	Horizontal : 106°(wide) ~ 41°(tele)
Privacy masking	4 regions
Flip mode	Horizontal, Vertical
Image enhancement	AF, AWB, AE, NR, TDN, DSS, BLC, DPC, WDR
IR LED	850nm, 8pcs, 30m

Video	
Compression	H.265/H.264/MJPEG
Frame rate	Max 60fps @ 1920x1080
Bitrate	Primary : 32Kbps ~ 16Mbps, Secondary : 32Kbps ~ 4Mbps
Resolution	320x240 ~ 1920x1080
Streaming	Primary : H.265/H.264, Secondary x 2: H.265/H.264/MJPEG
Burn-in OSD	Multi-lingual
Output	N/A

Audio	
Compression	G.711
Sampling rate	G.711 : 8 KHz
Bitrate	G.711 : 64Kbps
Streaming	Full-duplex
Input/Output	1 x Line-In (mono), 1 x Line-Out (mono)

Network	
Protocol	IPv4/v6, TCP, UDP, IGMP(Multicast), ICMP, DHCP, HTTP, HTTP, FTP, SNMP, SMTP, UPnP, WS-Discovery, Zero Configuration, NTP, SRT, MPEG-TS, RTP, RTSP, RTMP, DDNS
Security	Password protection, IP address filtering, HTTPS encryption
API	Truen protocol/SDK, ONVIF, PSIA, MPEG-TS
Interface	Ethernet 10/100 base-T (RJ-45)

Event / Alarm	
Event sources	Motion, Sensor input, Client disconnection, Intrusion, Line crossing, Tampering, Face detection, Sound detection, User defined event
Event actions	Notification(E-mail), FTP, PTZ preset, Alarm control, Recording
External devices	1 x Sensor-In (dry contact, NO/NC) 1 x Alarm-Out (dry contact, NO) 1 x RS-485 port : PTZ control etc.

General	
Power Supply	Min DC12V/1.5A, PoE(Power over Ethernet) : 802.3af
Power Consumption	DC12V/PoE : Max 12W
Operating Temperature	-20°C ~ 70°C
Storage Temperature	-20°C ~ 70°C
Operating Humidity	Less than 90% RH
Storage Humidity	Less than 90% RH
Edge Storage	Micro SD/SDHC/SDXC (Max 512GB)
Dimensions (W x H x D)	Ø100 for vandal dome, Ø147 for bottom
Weight	980g

DIMENSION

(mm)

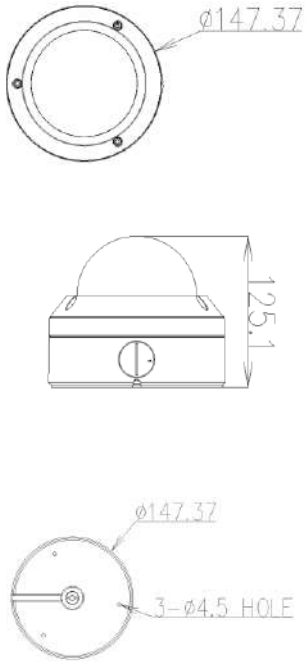

© Truen Co., Ltd. All rights reserved. Reproduction in whole or in part without written permission is prohibited. Features and specifications are subject to change without notice. The values for mass and dimensions are approximate. Please contact for specific models available in your region.

TRUEN

TX-P5N236N20R

- Sony 1/2” Progressive Scan CMOS
- H.265 / H.264 / MJPEG
- Max 60FPS @ 1920 x 1080
- A.I based Auto Tracking
- Object Detection
- X36 Optical Zoom
- X8 Digital Zoom
- SRT (Secure Reliable Transport)
- RTSP/RTMP/MPEG-TS
- ONVIF (Profile S, Profile G)
- True WDR
- Hybrid CBR

www.truen.co.kr
os@truen.co.kr

ONVIF SRT READY SRTALLIANCE SECURE RELIABLE TRANSPORT

TX-P5N236N20R Specifications

Basic Specifications	
Image Sensor	1/2” Sony CMOS Sensor
Minimum illumination	0 Lux (IR LED on), Color : 0.07 Lux at 1/30sec, F1.4, 50IRE BW : 0.0003 Lux at 1/30sec, F1.5, 50IRE (IR LED off)
Lens (wide to tele)	36x optical zoom, f = 6mm to 216mm
Shutter Speed	1/1 to 1/100000
Maximum Aperture Ratio	F1.5 ~ F4.8
Angle of View	Horizontal : 58.5°(wide) ~ 2.1°(tele)
Privacy masking	8 regions
Flip mode	Horizontal, Vertical
Image enhancement	AE, AWB, AGC, TDN, DNR,BLC, WDR, DSS, DIS, Defog, Color Enhancement
IR LED	11 pieces, 300m
Video	
Compression	H.265/H.264/MJPEG
Frame rate	Max 60fps @ 1920x1080
Bitrate	Primary : 32Kbps ~ 16Mbps, Secondary : 32Kbps ~ 4Mbps
Resolution	320x240 ~ 1920x1080
Streaming	Quad Streaming - Primary : H.265/H.264, Secondary x 3 : H.265/H.264/MJPEG
Bitrate Control	CBR / VBR / Hybrid / Adaptive CBR / Smart CBR
Burn-in OSD	Multi-lingual
Output	Composite
Audio	
Compression	G.711
Sampling rate	G.711 : 8 KHz
Bitrate	G.711 : 64Kbps
Streaming	G.711 : Full-duplex
Input/Output	1 x Line-In (mono), 1 x Line-Out (mono)
PTZ Control	
Operating angle	Horizontal: 360°, Vertical: 210°(-15° ~ 195°)
Operating speed	PAN /TILT: Preset Max Speed(400°/sec) / Manual Max Speed(240 °/sec)
PTZ functionalities	Preset (500), Pattern (4), Swing (8), Group (8), Auto parking
Network	
Protocol	IPv4/v6, TCP, UDP, IGMP(Multicast), ICMP, DHCP, HTTP, HTTP, FTP, SNMP, SMTP, UPnP, WS-Discovery, Zero Configuration, NTP, SRT, MPEG-TS, RTP, RTSP, RTMP, DDNS
Security	Password protection, IP address filtering, HTTPS encryption
API	Truen protocol/SDK, ONVIF, PSIA, MPEG-TS
Interface	Ethernet 10/100 base-T (RJ-45)
Event / Alarm	
Event sources	Motion, Sensor input, Client disconnection, Intrusion, Line crossing, Tampering, Abnormal video detection, Face detection, Sound detection, Shock detection, User defined event
Event actions	Notification(E-mail), FTP, PTZ preset, Alarm control, Recording
External devices	4 x Sensor-In (dry contact, NO/NC), 2 x Alarm-Out (dry contact, NO) 1 x RS-485 port : PTZ control etc.
General	
Power Supply	Min AC24V/3.0A
Power Consumption	AC24V : 63W
Operating Temperature	-10°C ~ 50°C (14°F ~ 122°F)
Operating Humidity	20% ~ 80% RH
Edge Storage	SD/SDHC/SDXC slot (Max 512GB)
Dimensions (W x H x D)	Ø226 x 364mm
Weight	5,020g

DIMENSION

(mm)

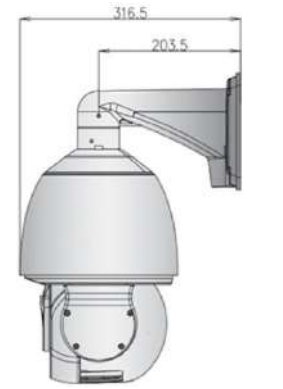

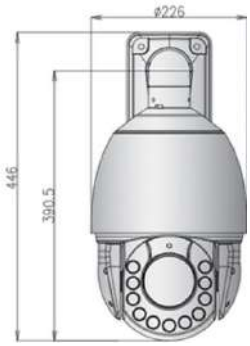

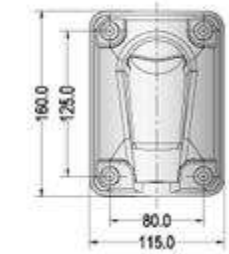

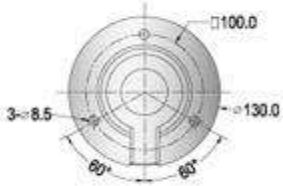

© Truen Co., Ltd. All rights reserved. Reproduction in whole or in part without written permission is prohibited. Features and specifications are subject to change without notice. The values for mass and dimensions are approximate. Please contact for specific models available in your region.

TRUEN

TX-P6236N20

- Sony 1/2” Progressive Scan CMOS
- H.265 / H.264 / MJPEG
- Max 60FPS @ 1920 x 1080
- X36 Optical Zoom / X8 Digital Zoom
- SRT (Secure Reliable Transport)
- RTSP/RTMP/MPEG-TS
- ONVIF (Profile S, Profile G)
- True WDR
- Hybrid CBR
- Intelligent Video
- High PoE

www.truen.co.kr
os@truen.co.kr

ONVIF SRT READY SRTALLIANCE SECURE RELIABLE TRANSPORT

TX-P6236N20 Specifications

Basic Specifications	
Image Sensor	1/2” Sony CMOS Sensor
Minimum illumination	Color : 0.09 Lux at 1/30sec, 50IRE BW : 0.005 Lux at 1/30sec, 50IRE
Lens (wide to tele)	36x optical zoom ; f= 6mm to 216mm
Shutter Speed	1/1 to 1/100000
Maximum Aperture Ratio	F1.4 ~ F4.9
Angle of View	Horizontal : 58.5°(wide) ~ °2.1(tele)
Privacy masking	8 regions
Flip mode	Horizontal, Vertical
Image enhancement	AE, AWB, AGC, TDN, DNR,BLC, WDR, DSS, DIS, Defog, Color Enhancement
IR LED	N/A

Video	
Compression	H.265/H.264/MJPEG
Frame rate	Max 60fps @ 1920x1080
Bitrate	Primary : 32Kbps ~ 16Mbps, Secondary : 32Kbps ~ 4Mbps
Resolution	352x240 ~ 1920x1080
Streaming	Quad Streaming - Primary : H.265/H.264, Secondary x 3 : H.265/H.264/MJPEG
Bitrate Control	CBR / VBR / Hybrid / Adaptive CBR / Smart CBR
Burn-in OSD	Multi-lingual
Output	Composite

Audio	
Compression	G.711
Sampling rate	G.711 : 8 KHz
Bitrate	G.711 : 64Kbps
Streaming	G.711 : Full-duplex
Input/Output	1 x Line-In (mono), 1 x Line-Out (mono)

PTZ Control	
Operating angle	Horizontal: 360°, Vertical: 210°(-15° ~ 195°)
Operating speed	PAN /TILT: Preset Max Speed(540°/sec) / Manual Max Speed(450 °/sec)
PTZ functionalities	Preset (500), Pattern (4), Swing (8), Group (8), Auto parking

Network	
Protocol	IPv4/v6, TCP, UDP, IGMP(Multicast), ICMP, DHCP, HTTP, HTTP, FTP, SNMP, SMTP, UPnP, WS-Discovery, Zero Configuration, NTP, SRT, MPEG-TS, RTP, RTSP, RTMP, DDNS
Security	Password protection, IP address filtering, HTTPS encryption
API	Truen protocol/SDK, ONVIF, PSIA, MPEG-TS
Interface	Ethernet 10/100/1000 base-T (RJ-45)

Event / Alarm	
Event sources	Motion, Sensor input, Client disconnection
Event actions	Notification(E-mail), FTP, PTZ preset, Alarm control, Recording
External devices	4 x Sensor-In (dry contact, NO/NC), 2 x Alarm-Out (dry contact, NO) 1 x RS-485 port : PTZ control etc.

General	
Power Supply	Min AC24V/2.5A, PoE+(Power over Ethernet) : 802.3at
Power Consumption	AC24V : Max 35W, PoE+ : Max 29W
Operating Temperature	-30°C ~ 70°C
Operating Humidity	20% ~ 80% RH
Edge Storage	SD/SDHC/SDXC slot (Max 512GB)
Dimensions (W x H x D)	Ø240 x 305.6mm, Ø177.7
Weight	3,680g (without bracket)

DIMENSION

(mm)

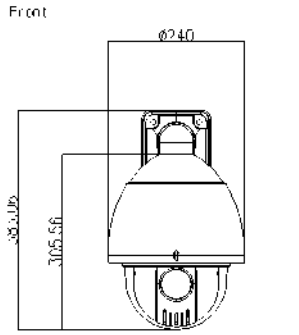

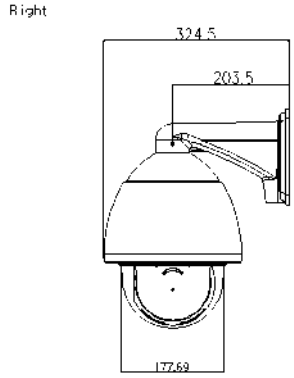

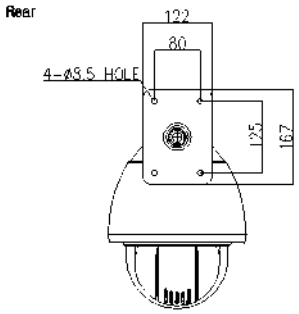

© Truen Co., Ltd. All rights reserved. Reproduction in whole or in part without written permission is prohibited. Features and specifications are subject to change without notice. The values for mass and dimensions are approximate. Please contact for specific models available in your region.