BRONZE SE WHITE LIGHT ILLUMINATOR

Five Advantages:

1. Tiny and slim body
2. High thermal conductivity
3. Precise secondary optical driving
4. Independent innovation of high efficiency power
5. Original creation of dual waterproof grooves

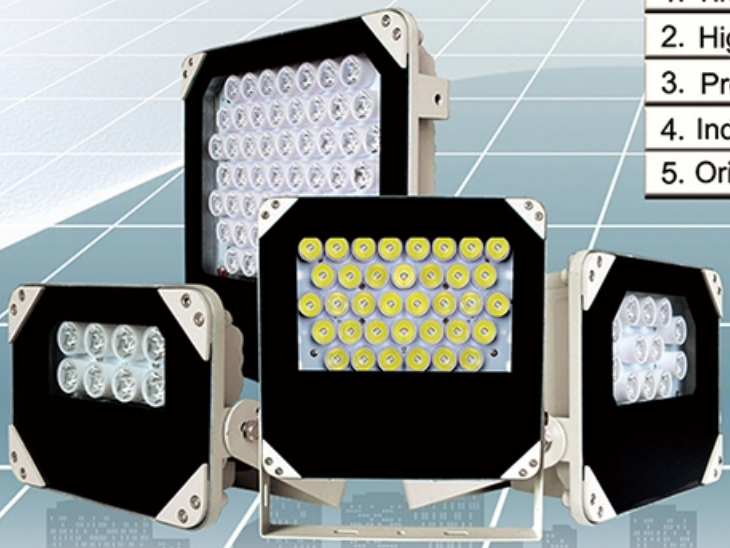

P69

SE8-W

P70

SE20-W

P71

SE36-W

P72

SE56-W

http://www.infrared-ir.com

S-SE8-W

Product Features

• Precise secondary optical technology

The latest LED technology assure outstanding performance of LED with excellent luminous efficiency and more uniform light spot.

• Independent innovation of high efficiency power drive schemes

The low failure rate of products is guaranteed because of our own optimized independent circuit design by widely using in our LED products for more than 5years.

• High thermal conductivity design

Excellent thermal management not only reduces excess heat and brightness decay of LED but also ensures efficient, reliable and continuous operation of LED throughout its lifetime as 50,000 hours.

• Energy saving technology

All our LED illuminators has energy saving circuit with low electrical power consumption.

• Slim body and light weight

Our patent owned housing is designed to simple installation and easy operation to reduce construction difficulty.

• Warranty Period

2Years warranty

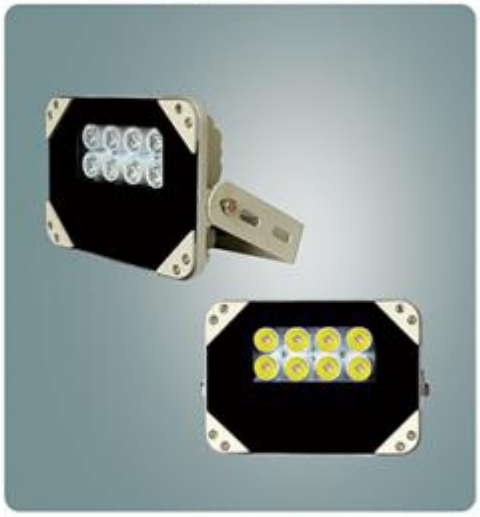

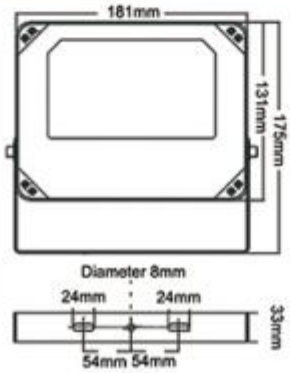

Specifications

S-SE8-W	Panel : Tempered glass panel
Quantity of LED : 8pcs high power white light LED	Housing : Aluminium die casting housing
Color temperature : 3000-3500K/5500-6000K	Bracket : Stainless steel wall mount bracket
Luminous flux : 960lm	Working temperature : -30℃ to +50℃
Working voltage : AC85-265V/DC12V/AC24V	Protection level : IP66
Day/night switch : Auto	Color : Beige
Power consumption : 14W	N.W : 1.2kg
Plug : Country standard	Dimension : 181*131*72mm

Viewing Angle and Distance

Model	Angle (°)	Distance (m)
S-SE8-15-W	15°	100m
S-SE8-30-W	30°	80m
S-SE8-45-W	45°	60m
S-SE8-60-W	60°	45m
S-SE8-90-W	90°	25m
S-SE8-120-W	120°	15m

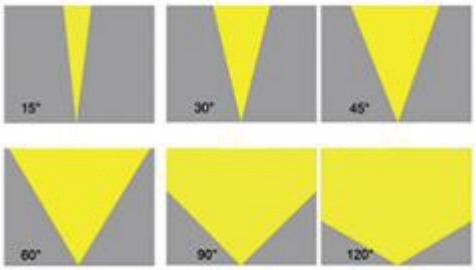

Actual viewing distance is depending on specification of camera and lens.

S-SE20-W

Product Features

• Precise secondary optical technology

The latest LED technology assure outstanding performance of LED with excellent luminous efficiency and more uniform light spot.

• Independent innovation of high efficiency power drive schemes

The low failure rate of products is guaranteed because of our own optimized independent circuit design by widely using in our LED products for more than 5years.

• High thermal conductivity design

Excellent thermal management not only reduces excess heat and brightness decay of LED but also ensures efficient, reliable and continuous operation of LED throughout its lifetime as 50,000 hours.

• Energy saving technology

All our LED illuminators has energy saving circuit with low electrical power consumption.

• Slim body and light weight

Our patent owned housing is designed to simple installation and easy operation to reduce construction difficulty.

• Warranty Period

2Years warranty

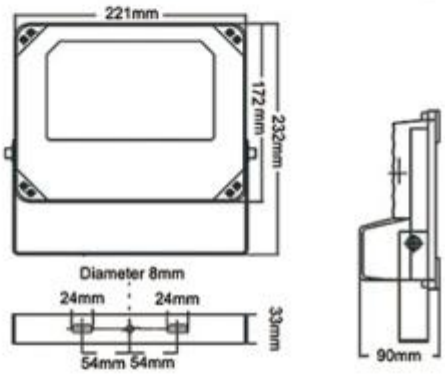

Specifications

S-SE20-W	Panel : Tempered glass panel
Quantity of LED : 20pcs high power white light LED	Housing : Aluminium die casting housing
Color temperature : 3000-3500K/5500-6000K	Bracket : Stainless steel wall mount bracket
Luminous flux : 2400lm	Working temperature : -30℃ to +50℃
Working voltage : AC85-265V/DC12V/AC24V	Protection level : IP66
Day/night switch : Auto	Color : Beige
Power consumption : 28W	N.W : 1.8kg
Plug : Country standard	Dimension : 221*172*90mm

Viewing Angle and Distance

Model	Angle (°)	Distance (m)
S-SE20-15-W	15°	160m
S-SE20-30-W	30°	130m
S-SE20-45-W	45°	90m
S-SE20-60-W	60°	70m
S-SE20-90-W	90°	50m
S-SE20-120-W	120°	30m

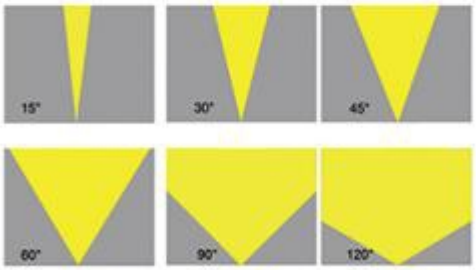

Actual viewing distance is depending on specification of camera and lens.

S-SE36-W

Product Features

• Precise secondary optical technology

The latest LED technology assure outstanding performance of LED with excellent luminous efficiency and more uniform light spot.

• Independent innovation of high efficiency power drive schemes

The low failure rate of products is guaranteed because of our own optimized independent circuit design by widely using in our LED products for more than 5years.

• High thermal conductivity design

Excellent thermal management not only reduces excess heat and brightness decay of LED but also ensures efficient, reliable and continuous operation of LED throughout its lifetime as 50,000 hours.

• Energy saving technology

All our LED illuminators has energy saving circuit with low electrical power consumption.

• Slim body and light weight

Our patent owned housing is designed to simple installation and easy operation to reduce construction difficulty.

• Warranty Period

2Years warranty

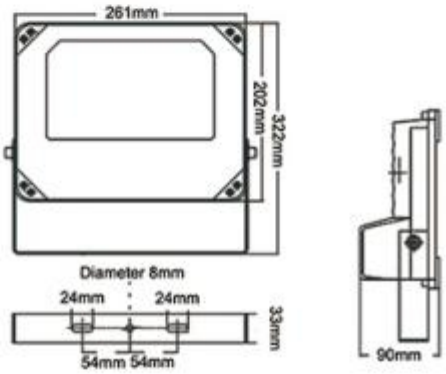

Specifications

S-SE36-W	Panel : Tempered glass panel
Quantity of LED : 36pcs high power white light LED	Housing : Aluminium die casting housing
Color temperature : 3000-3500K/5500-6000K	Bracket : Stainless steel wall mount bracket
Luminous flux : 4320lm	Working temperature : -30℃ to +50℃
Working voltage : AC85-265V/DC12V/AC24V	Protection level : IP66
Day/night switch : Auto	Color : Beige
Power consumption : 48W	N.W : 2.3kg
Plug : Country standard	Dimension : 261*202*90mm

Viewing Angle and Distance

Model	Angle (°)	Distance (m)
S-SE36-15-W	15°	220m
S-SE36-30-W	30°	160m
S-SE36-45-W	45°	120m
S-SE36-60-W	60°	90m
S-SE36-90-W	90°	70m
S-SE36-120-W	120°	40m

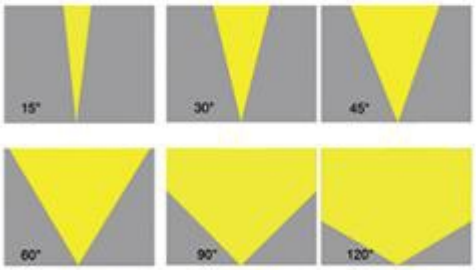

Actual viewing distance is depending on specification of camera and lens.

S-SE56-W

Product Features

• Precise secondary optical technology

The latest LED technology assure outstanding performance of LED with excellent luminous efficiency and more uniform light spot.

• Independent innovation of high efficiency power drive schemes

The low failure rate of products is guaranteed because of our own optimized independent circuit design by widely using in our LED products for more than 5years.

• High thermal conductivity design

Excellent thermal management not only reduces excess heat and brightness decay of LED but also ensures efficient, reliable and continuous operation of LED throughout its lifetime as 50,000 hours.

• Energy saving technology

All our LED illuminators has energy saving circuit with low electrical power consumption.

• Slim body and light weight

Our patent owned housing is designed to simple installation and easy operation to reduce construction difficulty.

• Warranty Period

2Years warranty

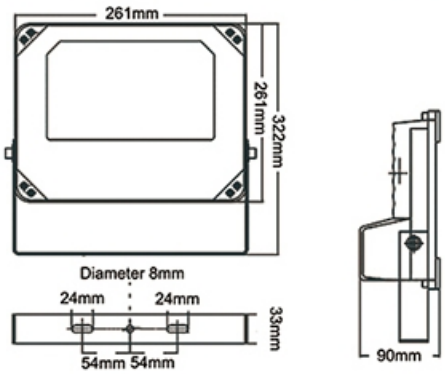

Specifications

S-SE56-W	Panel : Tempered glass panel
Quantity of LED : 56pcs high power white light LED	Housing : Aluminium die casting housing
Color temperature : 3000-3500K/5500-6000K	Bracket : Stainless steel wall mount bracket
Luminous flux : 6720lm	Working temperature : -30℃ to +50℃
Working voltage : AC85-265V	Protection level : IP66
Day/night switch : Auto	Color : Beige
Power consumption : 60W	N.W : 2.9kg
Plug : Country standard	Dimension : 261*261*90mm

Viewing Angle and Distance

Model	Angle (°)	Distance (m)
S-SE56-15-W	15°	280m
S-SE56-30-W	30°	220m
S-SE56-45-W	45°	140m
S-SE56-60-W	60°	120m
S-SE56-90-W	90°	100m
S-SE56-120-W	120°	65m

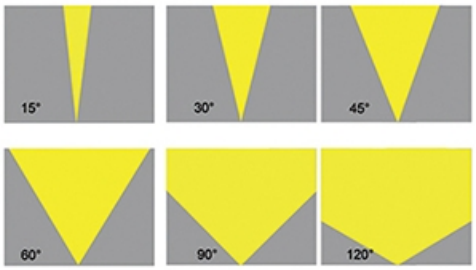

Actual viewing distance is depending on specification of camera and lens.