Five Advantages:

1. Tiny and slim body
2. High thermal conductivity
3. Precise secondary optical driving
4. Independent innovation of high efficiency power
5. Original creation of dual waterproof grooves

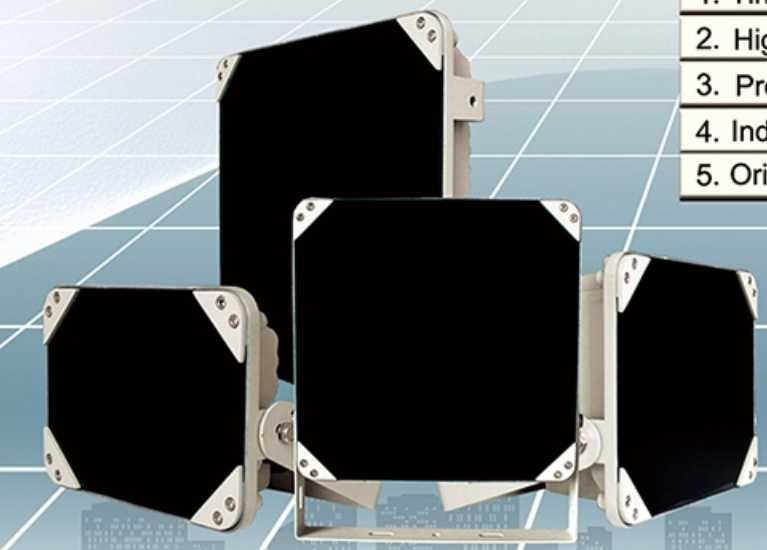

P31

SE8-IR

P32

SE12-IR

P33

SE24-IR

P34

SE36-IR

S-SE8-IR

Product Features

AUTO D/N CONTROL | ENERGY SAVING | HI-POWER LED | IR LAMP

• Precise secondary optical technology

The latest LED technology assure outstanding performance of LED with excellent luminous efficiency and more uniform light spot.

• Independent innovation of high efficiency power drive schemes

The low failure rate of products is guaranteed because of our own optimized independent circuit design by widely using in our LED products for more than 5years.

• High thermal conductivity design

Excellent thermal management not only reduces excess heat and brightness decay of LED but also ensures efficient, reliable and continuous operation of LED throughout its lifetime as 50,000 hours.

• Energy saving technology

All our LED illuminators has energy saving circuit with low electrical power consumption.

• Slim body and light weight

Our patent owned housing is designed to simple installation and easy operation to reduce construction difficulty.

• Warranty Period

2Years warranty

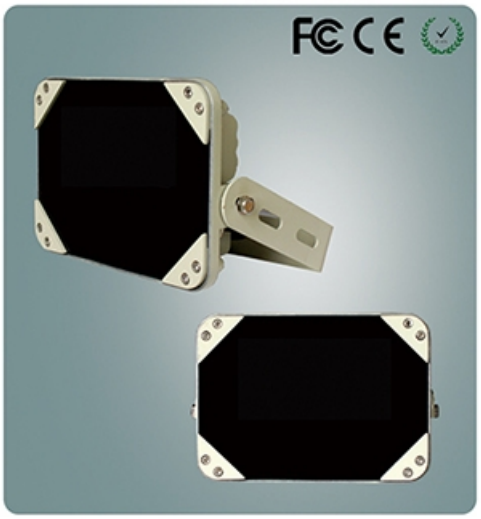

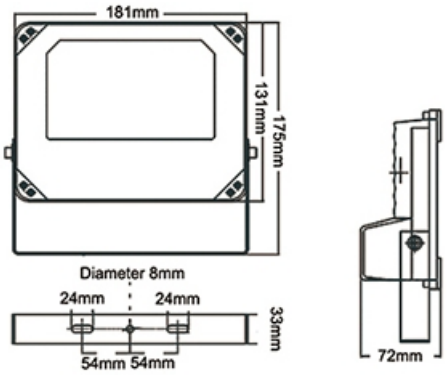

IR ILLUMINATOR

Specifications

S-SE8-IR	Housing： Aluminium die casting housing
Quantity of LED： 8pcs high power IR LED	Bracket： Stainless steel wall mount bracket
Wavelength： 740nm/850nm/940nm	Working temperature： -30℃ to +50℃
Working voltage： AC85-265V/DC12V/AC24V	Protection level： IP66
Day/night switch： Auto	Color： Beige
Power consumption： 14W	N.W： 1.2KG
Plug： Country standard	Dimension： 180*131*72mm
Panel： Tempered glass	

Viewing Angle and Distance

Model	Angle (°)	Distance (m)
S-SE8-15-IR	15°	140m
S-SE8-30-IR	30°	100m
S-SE8-45-IR	45°	80m
S-SE8-60-IR	60°	60m
S-SE8-90-IR	90°	45m
S-SE8-120-IR	120°	25m

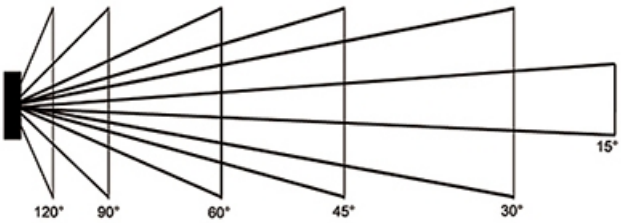

Actual viewing distance is depending on specification of camera and lens.

S-SE12-IR

Product Features

• Precise secondary optical technology

The latest LED technology assure outstanding performance of LED with excellent luminous efficiency and more uniform light spot.

• Independent innovation of high efficiency power drive schemes

The low failure rate of products is guaranteed because of our own optimized independent circuit design by widely using in our LED products for more than 5years.

• High thermal conductivity design

Excellent thermal management not only reduces excess heat and brightness decay of LED but also ensures efficient, reliable and continuous operation of LED throughout its lifetime as 50,000 hours.

• Energy saving technology

All our LED illuminators has energy saving circuit with low electrical power consumption.

• Slim body and light weight

Our patent owned housing is designed to simple installation and easy operation to reduce construction difficulty.

• Warranty Period

2Years warranty

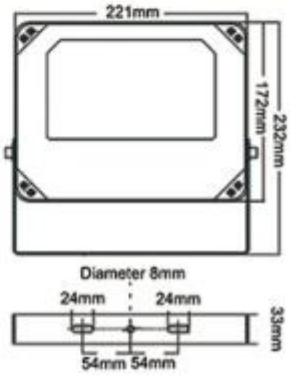

Specifications

S-SE12-IR	Housing： Aluminium die casting housing
Quantity of LED： 12pcs high power IR LED	Bracket： Stainless steel wall mount bracket
Wavelength： 740nm/850nm/940nm	Working temperature： -30℃ to +50℃
Working voltage： AC85-265V/DC12V/AC24V	Protection level： IP66
Day/night switch： Auto	Color： Beige
Power consumption： 28W	N.W： 1.7KG
Plug： Country standard	Dimension： 221*172*90mm
Panel： Tempered glass	

Viewing Angle and Distance

Model	Angle (°)	Distance (m)
S-SE12-15-IR	15°	220m
S-SE12-30-IR	30°	170m
S-SE12-45-IR	45°	140m
S-SE12-60-IR	60°	100m
S-SE12-90-IR	90°	80m
S-SE12-120-IR	120°	50m

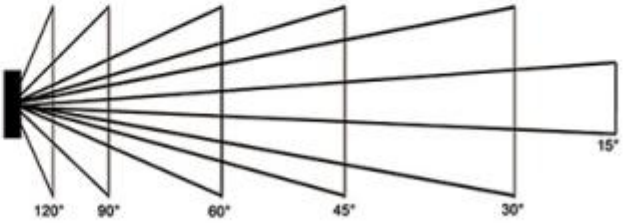

Actual viewing distance is depending on specification of camera and lens.

S-SE24-IR

Product Features

AUTO D/N CONTROL | ENERGY SAVING | HI-POWER LED | IR LAMP

• Precise secondary optical technology

The latest LED technology assure outstanding performance of LED with excellent luminous efficiency and more uniform light spot.

• Independent innovation of high efficiency power drive schemes

The low failure rate of products is guaranteed because of our own optimized independent circuit design by widely using in our LED products for more than 5years.

• High thermal conductivity design

Excellent thermal management not only reduces excess heat and brightness decay of LED but also ensures efficient, reliable and continuous operation of LED throughout its lifetime as 50,000 hours.

• Energy saving technology

All our LED illuminators has energy saving circuit with low electrical power consumption.

• Slim body and light weight

Our patent owned housing is designed to simple installation and easy operation to reduce construction difficulty.

• Warranty Period

2Years warranty

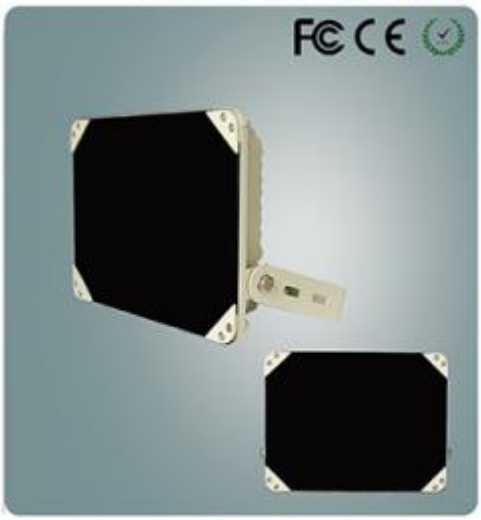

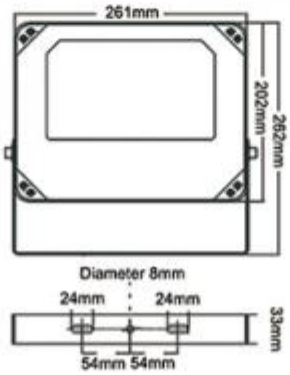

Specifications

S-SE24-IR	Housing： Aluminium die casting housing
Quantity of LED： 24pcs high power IR LED	Bracket： Stainless steel wall mount bracket
Wavelength： 740nm/850nm/940nm	Working temperature： -30℃ to +50℃
Working voltage： AC85-265V/DC12V/AC24V	Protection level： IP66
Day/night switch： Auto	Color： Beige
Power consumption： 48W	N.W： 2.2KG
Plug： Country standard	Dimension： 261*202*90mm
Panel： Tempered glass	

Viewing Angle and Distance

Model	Angle (°)	Distance (m)
S-SE24-15-IR	15°	340m
S-SE24-30-IR	30°	260m
S-SE24-45-IR	45°	180m
S-SE24-60-IR	60°	130m
S-SE24-90-IR	90°	100m
S-SE24-120-IR	120°	65m

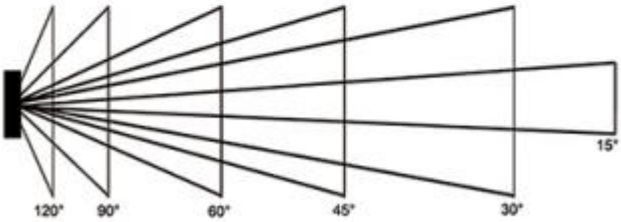

Actual viewing distance is depending on specification of camera and lens.

S-SE36-IR

Product Features

• Precise secondary optical technology

The latest LED technology assure outstanding performance of LED with excellent luminous efficiency and more uniform light spot.

• Independent innovation of high efficiency power drive schemes

The low failure rate of products is guaranteed because of our own optimized independent circuit design by widely using in our LED products for more than 5years.

• High thermal conductivity design

Excellent thermal management not only reduces excess heat and brightness decay of LED but also ensures efficient, reliable and continuous operation of LED throughout its lifetime as 50,000 hours.

• Energy saving technology

All our LED illuminators has energy saving circuit with low electrical power consumption.

• Slim body and light weight

Our patent owned housing is designed to simple installation and easy operation to reduce construction difficulty.

• Warranty Period

2Years warranty

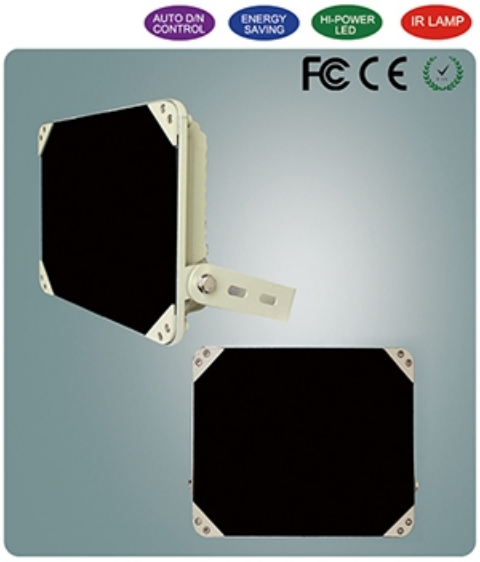

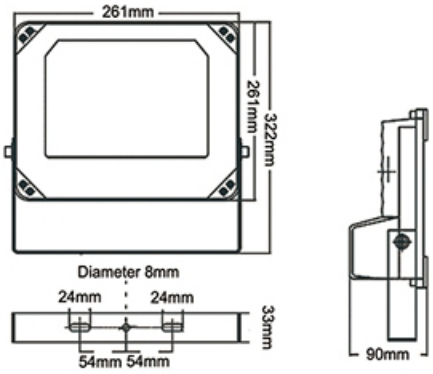

Specifications

S-SE36-IR	Housing： Aluminium die casting housing
Quantity of LED： 36pcs high power IR LED	Bracket： Stainless steel wall mount bracket
Wavelength： 740nm/850nm/940nm	Working temperature： -30℃ to +50℃
Working voltage： AC85-265V/DC12V/AC24V	Protection level： IP66
Day/night switch： Auto	Color： Beige
Power consumption： 60W	N.W： 2.9KG
Plug： Country standard	Dimension： 261*261*90mm
Panel： Tempered glass	

Viewing Angle and Distance

Model	Angle (°)	Distance (m)
S-SE36-15-IR	15°	380m
S-SE36-30-IR	30°	280m
S-SE36-45-IR	45°	200m
S-SE36-60-IR	60°	150m
S-SE36-90-IR	90°	110m
S-SE36-120-IR	120°	75m

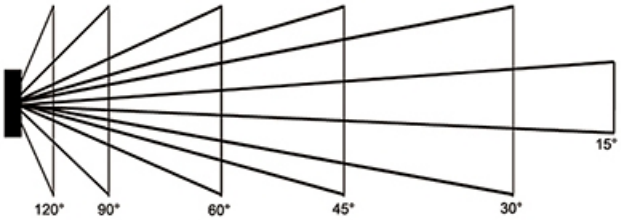

Actual viewing distance is depending on specification of camera and lens.